S9086–QH–STM–010/CH–470

THIRD REVISION

NAVAL SHIPS' TECHNICAL MANUAL

CHAPTER 470

SHIPBOARD BW/CW DEFENSE AND COUNTERMEASURES

THIS CHAPTER SUPERSEDES REV 2 CHAPTER 470 DATED 1 SEPTEMBER 1994

DISTRIBUTION STATEMENT C: DISTRIBUTION AUTHORIZED TO GOVERNMENT AGENCIES AND THEIR CONTRACTORS: ADMINISTRATIVE AND OPERATIONAL USE. (30 DECENBER 1993) OTHER REQUESTS SHALL BE REFERRED TO THE NAVAL SEA SYSTEMS COMMAND (SEA–56Z11).

WARNING: THIS DOCUMENT CONTAINS TECHNICAL DATA WHOSE EXPORT IS RESTRICTED BY THE ARMS EXPORT CONTROL ACT (TITLE 22, U.S.C., SEC. 2751, ET SEQ.) OR EXECUTIVE ORDER 12470. VIOLATIONS OF THESE EXPORT LAWS ARE SUBJECT TO SEVERE CRIMINAL PENALTIES. DISSEMINATE IN ACCORDANCE WITH PROVISIONS OF OPNAVINST 5510.161, REFERENCE (JJ).

DESTRUCTION NOTICE: DESTROY BY ANY METHOD THAT WILL PREVENT DISCLOSURE OF CONTENTS OR RECONSTRUCTION OF THE DOCUMENT.

PUBLISHED BY DIRECTION OF COMMANDER, NAVAL SEA SYSTEMS COMMAND.

6 AUGUST 1998

NAVSEA TECHNICAL MANUAL CERTIFICATION SHEET

Certification Applies to: New Manual ☐ Revision ☒ Change ☐

Applicable TMINS/Pub. No. S9086–QH–STM–010/CH–470R3

Publication Date (Mo, Da, Yr) August 6, 1998

Title: NSTM Chapter 470, Shipboard BW/CW Defense and Countermeasures

TMCR/TMSR/Specification No:

CHANGES AND REVISIONS:

Purpose: Bars in the outside margins indicate changes since the last revision.

Equipment Alteration Numbers Incorporated:

TMDER/ACN Numbers Incorporated:

Continue on reverse side or add pages as needed.

CERTIFICATION STATEMENT

This is to certify that responsible NAVSEA activities have reviewed the above identified document for acquisition compliance, technical coverage, and printing quality. This form is for internal NAVSEA management use only, and does not imply contractual approval or acceptance of the technical manual by the Government, nor relieve the contractor of any responsibility for delivering the technical manual in accordance with the contract requirement.

Authority	Name	Signature	Organization	Code	Date
Acquisition	S. J. Fountain	Sandra J Fountain	NAVSEASYSCOM	03G1	8/6/98
Technical	S. J. Fountain	Sandra J Fountain	NAVSEASYSCOM	03G1	8/6/98
Printing Release	Digital Media Publishing				

TABLE OF CONTENTS

CHAPTER 470
SHIPBOARD BW/CW DEFENSE AND COUNTERMEASURES

SECTION 1. INTRODUCTION

Paragraph		Page
470–1.1	GENERAL CHARACTERISTICS OF CHEMICAL WARFARE (CW) AND BIOLOGICAL WARFARE (BW)	1–1
470–1.1.1	INTRODUCTION	1–1
470–1.1.2	CHEMICAL AND BIOLOGICAL WEAPONS	1–1
470–1.1.2.1	Unique Characteristics Shared by Chemical and Biological Weapons	1–1
470–1.1.2.2	Differences Between Chemical and Biological Weapons	1–2
470–1.2	DOCTRINE, PROCEDURES AND TECHNICAL ASPECTS OF CHEMICAL AND BIOLOGICAL WARFARE DEFENSE	1–2
470–1.2.1	INTERRELATIONSHIP OF OPERATIONAL AND TECHNICAL ASPECTS OF SHIPBOARD CHEMICAL AND BIOLOGICAL DEFENSE	1–2
470–1.2.2	DOCUMENTATION	1–2
470–1.3	ELEMENTS OF CHEMICAL-BIOLOGICAL DEFENSE	1–2
470–1.3.1	DETECTION AND ASSESSMENT	1–2
470–1.3.2	INDIVIDUAL PROTECTION	1–3
470–1.3.3	COLLECTIVE PROTECTION	1–3
470–1.3.4	CONTAMINATION CONTROL	1–3
470–1.3.5	TRAINING	1–3
470–1.3.5.1	Acclimation	1–4
470–1.3.5.2	Integration	1–4
470–1.3.5.3	Detection and Decontamination	1–4
470–1.4	SHIPBOARD ORGANIZATION FOR CHEMICAL AND BIOLOGICAL DEFENSE	1–4
470–1.4.1	RESPONSIBILITIES FOR CB DEFENSE	1–4
470–1.4.1.1	General Responsibilities	1–4
470–1.4.1.2	Specific Responsibilities	1–4
470–1.4.2	THE DAMAGE CONTROL ORGANIZATION	1–4
470–1.4.2.1	Full-Time DC Personnel	1–4
470–1.4.2.2	Part-Time DC Personnel	1–4
470–1.4.3	DAMAGE CONTROL RESPONSIBILITIES	1–4
470–1.4.3.1	Damage Control Administrative Responsibilities	1–4
470–1.4.3.2	Damage Control Central Responsibilities	1–5
470–1.4.3.3	Repair Party Responsibilities	1–5

SECTION 2. CHEMICAL WARFARE

470–2.1	THE NATURE OF CHEMICAL AGENTS AND CHEMICAL COMPOUNDS	2–1
470–2.1.1	CLASSIFICATION OF CHEMICAL AGENTS AND CHEMICAL COMPOUNDS	2–1
470–2.1.1.1	Physiological Effects	2–1
470–2.1.1.2	Military Use	2–1
470–2.1.1.3	Duration of Effectiveness	2–1
470–2.1.1.4	Route of Entry	2–1

TABLE OF CONTENTS (Continued)

Paragraph		Page
470–2.1.1.5	Onset of Effects	2–3
470–2.1.2	THE PHYSICAL STATE OF CHEMICAL AGENTS AND CHEMICAL COMPOUNDS	2–3
470–2.1.2.1	Changes of Physical State	2–3
470–2.1.2.2	Aerosols	2–3
470–2.1.2.3	Relationship Between Physical State, Persistency and Route of Entry	2–3
470–2.1.2.4	Water as an Example of a Substance Occurring in Different Physical Forms	2–4
470–2.1.3	THE PHYSICAL AND CHEMICAL PROPERTIES OF CHEMICAL AGENTS	2–4
470–2.1.3.1	Volatility	2–4
470–2.1.3.2	Viscosity	2–6
470–2.1.3.3	Vapor Density	2–6
470–2.1.3.4	Reactivity	2–7
470–2.1.3.5	Solubility	2–7
470–2.1.3.6	Sorbability	2–7
470–2.1.3.7	Flammability	2–7
470–2.1.3.8	Sensory Detection	2–7
470–2.1.4	THE TOXIC PROPERTIES OF CHEMICAL AGENTS	2–7
470–2.1.4.1	Cumulative Effects	2–8
470–2.1.4.2	Detoxification of Chemical Agents in the Body	2–8
470–2.1.4.3	Vapor Dose	2–8
470–2.1.4.4	Liquid Agent Dose	2–8
470–2.1.4.5	Toxicity Data on Individual Chemical Agents	2–9
470–2.1.4.6	Physiology and Symptoms	2–9
470–2.2	CHEMICAL WEAPON SYSTEMS: THE RELEASE, TRAVEL AND DEPOSITION OF CHEMICAL AGENTS	2–11
470–2.2.1	INTRODUCTION	2–11
470–2.2.2	CHEMICAL WEAPON SYSTEMS	2–11
470–2.2.2.1	Point Source	2–11
470–2.2.2.2	Multiple Point Source	2–11
470–2.2.2.3	Line Source	2–11
470–2.2.3	CHEMICAL ATTACKS ON SHIPS	2–11
470–2.2.3.1	Nonpersistent Agents	2–11
470–2.2.3.2	Persistent Agents	2–11
470–2.2.3.3	Chemical Attack Scenarios from a Defensive Viewpoint	2–12
470–2.2.4	CHEMICAL AGENT TRAVEL TO AND INTERACTION WITH A SHIP	2–12
470–2.2.4.1	Sources of Chemical Agent Vapor	2–12
470–2.2.4.2	Chemical Agent Aerosol Travel	2–13
470–2.2.4.3	Interaction of Vapor and Aerosol with Ventilation Systems and Interior Spaces	2–13
470–2.2.4.4	Liquid Chemical Agent Travel and Deposition	2–13
470–2.3	SHIPBOARD POST-ATTACK ENVIRONMENTS – CHEMICAL HAZARDS	2–14
470–2.3.1	CHARACTERIZATION OF CHEMICAL HAZARDS	2–14
470–2.3.2	HAZARD DESCRIPTIONS	2–14
470–2.3.2.1	Eye-Respiratory Vapor Hazard	2–14
470–2.3.2.2	Skin Vapor Hazard	2–14
470–2.3.2.3	Liquid Hazard	2–16
470–2.3.2.4	Secondary Vapor Hazard	2–16
470–2.3.2.5	Liquid Hazard Detection and Monitoring	2–16

TABLE OF CONTENTS (Continued)

Paragraph		Page
470–2.3.3	CHARACTERIZATION OF CHEMICAL HAZARD AT SHIPBOARD LOCATIONS	2–16
470–2.3.3.1	Weather Decks	2–16
470–2.3.3.2	Partial Weather Exposure	2–16
470–2.3.3.3	Interior Compartment – Conventional Ventilation	2–16
470–2.3.3.4	Interior Compartment – HEPA Filtration (Limited Protection Zone)	2–17
470–2.3.3.5	Interior Compartment – Collective Protection System (CPS) Ventilation (Total Protection Zone)	2–17
470–2.3.3.6	Loss of Structural Integrity or Contamination Control	2–17

SECTION 3. BIOLOGICAL WARFARE

470–3.1	THE NATURE OF BIOLOGICAL AGENTS	3–1
470–3.1.1	DEFINITION OF BIOLOGICAL AGENTS	3–1
470–3.1.1.1	Pathogens	3–1
470–3.1.1.2	Toxins	3–1
470–3.1.2	USES OF BIOLOGICAL AGENTS	3–1
470–3.1.3	CLASSIFICATION OF BIOLOGICAL AGENTS	3–2
470–3.1.3.1	Biological Type	3–2
470–3.1.3.2	Military Use	3–2
470–3.1.3.3	Persistence	3–2
470–3.1.3.4	Route of Entry	3–2
470–3.1.3.5	Onset of Effects	3–2
470–3.2	TYPES OF POTENTIAL BIOLOGICAL AGENTS	3–2
470–3.2.1	TYPES OF PATHOGENS	3–2
470–3.2.1.1	Bacteria	3–3
470–3.2.1.2	Rickettsiae	3–3
470–3.2.1.3	Viruses	3–3
470–3.2.1.4	Fungi	3–3
470–3.2.1.5	Protozoa	3–3
470–3.2.2	NATURAL SOURCES OF POTENTIAL TOXIN AGENTS	3–3
470–3.2.2.1	Bacterial Toxins	3–4
470–3.2.2.2	Mycotoxins	3–4
470–3.2.2.3	Algal Toxins	3–4
470–3.2.2.4	Animal Venoms	3–4
470–3.2.2.5	Plant Toxins	3–4
470–3.2.3	PHYSIOLOGICAL EFFECTS OF TOXINS	3–4
470–3.2.3.1	Neurotoxins	3–4
470–3.2.3.2	Cytotoxins	3–4
470–3.2.3.3	Enterotoxins	3–4
470–3.2.3.4	Dermatoxins	3–4
470–3.3	PROPERTIES OF BIOLOGICAL AGENTS	3–4
470–3.3.1	PROPERTIES OF PATHOGENS	3–4
470–3.3.1.1	Viability	3–4
470–3.3.1.2	Communicability	3–5
470–3.3.1.3	Incubation Period	3–5
470–3.3.2	PROPERTIES OF TOXINS	3–5
470–3.3.2.1	Toxicity	3–5
470–3.3.2.2	Lack of Volatility	3–5
470–3.4	DISSEMINATION AND DECAY OF BIOLOGICAL AGENTS	3–5
470–3.4.1	DELIVERY OF TOXINS	3–5

TABLE OF CONTENTS (Continued)

Paragraph		Page
470–3.4.2	DELIVERY OF PATHOGENS	3–5
470–3.4.2.1	Weapon Systems for Delivery of Pathogens Against Ships at Sea	3–5
470–3.4.2.2	Delivery of Pathogens Against Ships in Port	3–5
470–3.4.3	EFFECTS OF ENVIRONMENTAL CONDITIONS ON BIOLOGICAL AGENTS	3–5
470–3.5	SHIPBOARD POST-ATTACK ENVIRONMENTS – BIOLOGICAL HAZARD	3–6
470–3.5.1	CHARACTERIZATION OF BIOLOGICAL HAZARDS	3–6
470–3.5.1.1	Aerosol Inhalation Hazard	3–6
470–3.5.1.2	Aerosol Skin Hazard	3–6
470–3.5.1.3	Liquid Hazard	3–6
470–3.5.2	CHARACTERIZATION OF BIOLOGICAL HAZARD AT SHIPBOARD LOCATIONS	3–6
470–3.5.2.1	Weather Decks	3–6
470–3.5.2.2	Partial Weather Exposure	3–6
470–3.5.2.3	Interior Compartment – Conventional Ventilation	3–7
470–3.5.2.4	Interior Compartment – HEPA Filtration (Limited Protection Zone)	3–7
470–3.5.2.5	Interior Compartment – Collective Protection System (CPS) Ventilation (Total Protection Zone)	3–7
470–3.5.2.6	Loss of Structural Integrity or Contamination Control	3–7

SECTION 4. DETECTION AND ASSESSMENT

470–4.1	DETECTION AND IDENTIFICATION OF CHEMICAL AGENTS	4–1
470–4.1.1	CHEMICAL AGENT DETECTION AND IDENTIFICATION FUNCTIONAL REQUIREMENTS	4–1
470–4.1.1.1	Remote Detection	4–1
470–4.1.1.2	Point Detection	4–1
470–4.1.1.3	Monitoring	4–1
470–4.1.2	CHEMICAL AGENT DETECTION AND IDENTIFICATION SYSTEM	4–1
470–4.2	DETECTION OF GASEOUS CHEMICAL AGENTS	4–1
470–4.2.1	DETECTION EQUIPMENT FOR CHEMICAL AGENT VAPOR	4–1
470–4.2.2	CHEMICAL WARFARE DIRECTIONAL DETECTOR	4–1
470–4.2.2.1	CWDD Principles of Operation	4–2
470–4.2.2.2	CWDD Description	4–2
470–4.2.2.3	AN/KAS–1A Modification	4–2
470–4.2.2.4	CWDD Operator Functions	4–2
470–4.2.3	CHEMICAL AGENT POINT DETECTOR SYSTEM (CAPDS)	4–2
470–4.2.3.1	CAPDS Principles of Operation	4–2
470–4.2.3.2	CAPDS Description	4–2
470–4.2.3.3	CAPDS Operator Functions	4–2
470–4.2.3.4	Operation of the CAPDS During Casualty Conditions	4–4
470–4.2.4	IMPROVED (CHEMICAL AGENT) POINT DETECTOR SYSTEM (IPDS)	4–4
470–4.2.4.1	IPDS Principles of Operation	4–4
470–4.2.4.2	IPDS Description	4–4
470–4.2.4.3	Operator Functions on the CDU	4–4
470–4.2.4.4	Operator Functions on the RDU	4–6
470–4.2.4.5	Clearing of the IMS Cells	4–6
470–4.2.4.6	Operation and Maintenance of the IPDS	4–6
470–4.2.5	M256A1 DETECTOR KITS	4–6
470–4.2.5.1	M256A1 Sampler–Detector Description and Principles of Operation	4–8
470–4.2.5.2	Functional use of the M256A1 Sampler–Detector	4–8

TABLE OF CONTENTS (Continued)

Paragraph		Page
470–4.2.5.3	M256A1 Sampler–Detector Operator Functions	4–8
470–4.2.5.4	Detection of Vapor Offgassing from a Potentially Contaminated Surface with an M256A1 Kit	4–9
470–4.2.5.5	M256A1 Sampler–Detector Operation Under Special Conditions	4–9
470–4.2.5.6	M256A1 Shelf Life and Disposal	4–9
470–4.2.5.7	M256A1 Training Kit	4–10
470–4.2.6	USE OF DRAEGER DETECTION TUBES FOR DETECTING PHOSGENE IN A CHEMICAL ATTACK	4–10
470–4.2.6.1	Draeger Tube Principles of Operation	4–10
470–4.2.6.2	Performance of Test for Phosgene	4–10
470–4.2.6.3	Shelf Life of Phosgene Draeger Tubes	4–10
470–4.2.7	CHEMICAL AGENT MONITOR	4–10
470–4.3	DETECTION OF LIQUID CHEMICAL AGENTS	4–10
470–4.3.1	DETECTION EQUIPMENT FOR LIQUID CHEMICAL AGENTS	4–10
470–4.3.2	M8 DETECTOR PAPER	4–10
470–4.3.2.1	M8 Detector Paper Operation	4–11
470–4.3.2.2	Functional Use of M8 Paper	4–11
470–4.3.3	M9 DETECTOR PAPER	4–11
470–4.3.3.1	M9 Detector Paper Operation	4–13
470–4.3.3.2	M9 Paper Operation Under Special Conditions	4–13
470–4.3.3.3	Functional Use of M9 Paper	4–13
470–4.3.3.4	Shelf Life and Operational Life of M9 Paper	4–13
470–4.3.4	TRAINING IN USE OF DETECTOR PAPER	4–14
470–4.4	MONITORING OF CHEMICAL AGENT CONTAMINATION	4–14
470–4.4.1	CHEMICAL SURVEY PROCEDURES	4–14
470–4.4.1.1	Information Required from Chemical Surveys	4–14
470–4.4.1.2	Chemical Surveys and Their Purposes	4–14
470–4.4.2	PERIODIC MONITORING FOR THE ARRIVAL OF LIQUID AGENT	4–14
470–4.4.2.1	Placement of Detector Paper	4–14
470–4.4.2.2	Topside Personnel	4–17
470–4.4.2.3	Chemical Hazard Assessment	4–17
470–4.4.3	ON–STATION MONITORING	4–17
470–4.4.3.1	Monitoring Locations	4–17
470–4.4.3.2	Continuous Testing	4–17
470–4.4.4	RAPID INTERNAL SURVEY	4–17
470–4.4.4.1	Survey Locations	4–19
470–4.4.4.2	Simultaneous Testing	4–19
470–4.4.4.3	Sequential Testing	4–19
470–4.4.4.4	Timing of Rapid Internal Surveys	4–19
470–4.4.5	RAPID EXTERNAL SURVEY	4–19
470–4.4.5.1	Rapid External Survey for Liquid Contamination	4–21
470–4.4.5.2	Rapid External Survey for Chemical Agent Vapor	4–21
470–4.4.6	SUBSEQUENT SURVEYS	4–21
470–4.4.7	REDUCING MOPP LEVEL	4–21
470–4.4.7.1	Unmasking Procedures with an M256A1 Kit	4–23
470–4.4.7.2	Unmasking Procedure When No M256A1 Kit is Available	4–23
470–4.5	DETECTION AND IDENTIFICATION OF BIOLOGICAL AGENTS	4–23
470–4.5.1	CONFIRMATION THAT A BIOLOGICAL ATTACK HAS OCCURRED	4–23
470–4.5.2	INTERIM BIOLOGICAL AGENT DETECTION SYSTEM (IBADS)	4–24
470–4.5.2.1	IBADS Principles of Operation	4–24
470–4.5.2.2	IBADS Description	4–24

TABLE OF CONTENTS (Continued)

Paragraph		Page
470–4.5.2.3	IBADS Operator Functions	4–24
470–4.6	COLLECTING BIOLOGICAL SAMPLES WITHOUT IBADS	4–24
470–4.6.1	BIOLOGICAL SURVEY PROCEDURES	4–24
470–4.6.1.1	Unique Characteristics of Biological Survey Procedures	4–24
470–4.6.1.2	Sampling Locations	4–25
470–4.6.1.3	Biological Surveys and Forms	4–26
470–4.6.1.4	Sampling Equipment	4–27
470–4.6.1.5	Sampling Procedures for Dry or Moist Areas	4–27
470–4.6.1.6	Sampling Procedures for Liquids	4–27
470–4.6.1.7	Additional Requirements for Potable Water Samples	4–30
470–4.6.1.8	Prelabeling Sample Containers	4–30
470–4.6.1.9	Support for Biological Surveys	4–30
470–4.6.2	FORWARDING BIOLOGICAL SAMPLES	4–30

SECTION 5. INDIVIDUAL PROTECTION

470–5.1	INDIVIDUAL PROTECTION REQUIREMENTS	5–1
470–5.1.1	INDIVIDUAL PROTECTION REQUIREMENTS IN A CHEMICAL HAZARD ENVIRONMENT	5–1
470–5.1.2	INDIVIDUAL PROTECTION REQUIREMENTS IN A BIOLOGICAL HAZARD ENVIRONMENT	5–1
470–5.2	EYE–RESPIRATORY PROTECTION EQUIPMENT	5–1
470–5.2.1	MCU–2/P PROTECTIVE MASK	5–1
470–5.2.1.1	Equipment Issued with the MCU–2/P Series Mask	5–1
470–5.2.1.2	Additional Accessories for the MCU–2/P Series Mask	5–4
470–5.2.1.3	MCU–2/P and MCU–2A/P Maintenance and Use	5–4
470–5.2.2	FITTING AND STOWING THE MCU–2/P MASK	5–4
470–5.2.2.1	Initial Sizing	5–4
470–5.2.2.2	Visual Check	5–4
470–5.2.2.3	Check for Leaks	5–5
470–5.2.2.4	Wearer Adjustment	5–5
470–5.2.2.5	Mask Stowage	5–5
470–5.2.3	DONNING PROCEDURES FOR THE MCU–2/P SERIES MASK	5–5
470–5.2.4	DOFFING PROCEDURES FOR THE MCU–2/P SERIES MASK	5–6
470–5.2.5	OUTSERT	5–6
470–5.2.6	C2 CANISTER	5–6
470–5.2.6.1	Canister Issue	5–6
470–5.2.6.2	Mask Canister Filter Life	5–7
470–5.2.7	COMBAT SPECTACLES	5–7
470–5.2.8	CANTEEN	5–7
470–5.2.9	MCU–2A/P PROTECTIVE MASK	5–7
470–5.2.10	VOICE AMPLIFIER	5–7
470–5.2.10.1	Allocation of Audio Projection Sets	5–8
470–5.2.10.2	Stowage, Issue and Use of Audio Projection Sets	5–8
470–5.2.10.3	Maintenance of the Audio Projection Set	5–8
470–5.2.11	MCK–3/P PROTECTIVE MASK (AIRCREW)	5–8
470–5.3	CHEMICAL PROTECTIVE CLOTHING	5–8
470–5.3.1	CHEMICAL PROTECTIVE OVERGARMENT	5–8
470–5.3.1.1	Chemical Protective Overgarment Description	5–8

TABLE OF CONTENTS (Continued)

Paragraph		Page
470–5.3.1.2	Chemical Protective Overgarment Packaging, Shelf Life and Operational Life	5–9
470–5.3.1.3	Use of the CPO in an Uncontaminated Environment	5–9
470–5.3.1.4	Use of the CPO in a Contaminated Environment	5–9
470–5.3.1.5	Chemical Protective Overgarment Training Suit	5–9
470–5.3.2	ADVANCED CHEMICAL PROTECTIVE GARMENT (ACPG)	5–11
470–5.3.2.1	ACPG Configuration	5–11
470–5.3.2.2	Fitting the ACPG	5–11
470–5.3.2.3	ACPG Storage, Shelf Life and Operational Life	5–11
470–5.3.2.4	Operational Service in an Uncontaminated Environment	5–14
470–5.3.2.5	Operational Service in a Contaminated Environment	5–15
470–5.3.2.6	Laundering of ACPG's	5–15
470–5.3.2.7	Repair of ACPG's	5–17
470–5.3.2.8	ACPG Training Suit	5–17
470–5.3.2.9	JSLIST Operator's Manual	5–17
470–5.3.3	CHEMICAL PROTECTIVE FOOTWEAR COVER (CPFC)	5–18
470–5.3.4	GLOVE SET, CHEMICAL PROTECTIVE	5–18
470–5.3.5	PROCEDURES FOR DONNING THE CPE WHEN USING THE CPO CONFIGURATION	5–18
470–5.3.6	PROCEDURES FOR DOFFING THE UNCONTAMINATED CPE WHEN USING THE CPO CONFIGURATION	5–20
470–5.3.7	PROCEDURES FOR DONNING THE CPE WHEN USING THE ACPG CONFIGURATION	5–20
470–5.3.8	PROCEDURES FOR DOFFING THE UNCONTAMINATED CPE WHEN USING THE ACPG CONFIGURATION	5–22
470–5.3.9	WET WEATHER CLOTHING	5–22
470–5.3.9.1	Parka	5–22
470–5.3.9.2	Overalls	5–22
470–5.3.9.3	Use of Wet Weather Clothing with the CPE	5–22
470–5.4	IMPACT OF WEARING CHEMICAL PROTECTIVE CLOTHING AND EQUIPMENT	5–23
470–5.4.1	IMPACTS ON SHIPBOARD OPERATIONS AND FUNCTIONS	5–23
470–5.4.2	COMPATIBILITY WITH OTHER PROTECTIVE CLOTHING	5–23
470–5.4.2.1	Specialized Protective Clothing	5–23
470–5.4.2.2	Flight Deck Clothing	5–24
470–5.4.3	PERSONNEL PERFORMANCE DEGRADATION	5–24
470–5.4.4	SELF AND BUDDY AID ITEMS ISSUED FOR INDIVIDUAL PROTECTION	5–24

SECTION 6. VENTILATION SYSTEM CAPABILITY IN A TOXIC ENVIRONMENT

470–6.1	VENTILATION FUNCTIONS AND SYSTEMS	6–1
470–6.1.1	FUNCTIONS	6–1
470–6.1.1.1	Filtration Capability	6–1
470–6.1.1.2	Minimizing the Entry of Contaminants	6–1
470–6.1.2	VENTILATION SYSTEMS	6–1
470–6.1.2.1	Conventional Ventilation System	6–1
470–6.1.2.2	Collective Protection System (CPS)	6–1
470–6.1.2.3	CPS Protection Levels for New Construction Ships	6–1
470–6.1.2.4	Selected Area Collective Protection System (SACPS)	6–2
470–6.1.2.5	References on Ventilation System Configuration and Capabilities	6–2

TABLE OF CONTENTS (Continued)

Paragraph		Page
470–6.2	CONVENTIONAL VENTILATION SYSTEM	6–2
470–6.2.1	CONVENTIONAL HVAC SYSTEM OPERATION IN A CB HAZARD ENVIRONMENT	6–2
470–6.2.1.1	Minimizing the Entry of Airborne Contamination with a Conventional Ventilation System	6–3
470–6.2.1.2	Conventional Ventilation System Operation in a Non–percutaneous Hazard Environment	6–3
470–6.2.1.3	Conventional Ventilation System Operation in a Percutaneous Vapor Hazard Environment	6–3
470–6.2.1.4	Timing of Securing Conventional Ventilation in a Percutaneous Vapor Hazard Environment	6–4
470–6.2.1.5	Recirculation System Operation to Reduce Heat Stress in a Percutaneous Hazard Environment	6–4
470–6.2.2	PURGING PROCEDURES	6–4
470–6.2.2.1	Example of Calculating Purge Time	6–4
470–6.2.2.2	Purging a Compartment Served by a Recirculation System	6–5
470–6.2.2.3	Post-Purge Survey and Unmasking Procedure	6–5
470–6.3	NEW CONSTRUCTION CPS TOTAL PROTECTION (TP) ZONES	6–5
470–6.3.1	TP ZONE DESIGN	6–5
470–6.3.1.1	Zone Boundaries	6–5
470–6.3.1.2	Zone Integrity	6–5
470–6.3.1.3	TP Zone Access	6–5
470–6.3.1.4	TP Zone Operating Modes	6–5
470–6.3.1.5	Conditional Spaces	6–6
470–6.3.1.6	Compressed Air Systems in TP Zones	6–6
470–6.3.2	TP ZONE COMPONENTS	6–6
470–6.3.2.1	CBR Filter System	6–6
470–6.3.2.2	TP Zone Supply and Exhaust Fans	6–6
470–6.3.2.3	Three–Position Exhaust Damper	6–6
470–6.3.2.4	Pressure Control Valve (PCV)	6–8
470–6.3.2.5	CPS Alarm System	6–8
470–6.3.2.6	Zone Pressure Gauges	6–8
470–6.3.2.7	Drain Traps in TP Zones	6–8
470–6.3.3	TP ZONE OPERATIONAL CONDITIONS	6–8
470–6.3.3.1	Normal Operations	6–8
470–6.3.3.2	Excessive Pressurization (High Zone Pressure)	6–8
470–6.3.3.3	Deficient Pressurization (Low Zone Pressure)	6–8
470–6.3.3.4	Casualty Condition (Emergency Operation)	6–8
470–6.3.4	TP ZONE TROUBLESHOOTING AND CASUALTY CONTROL	6–9
470–6.3.4.1	Casualty Control Procedures for Excessive Pressurization of TP Zone (High Zone Pressure)	6–10
470–6.3.4.2	Casualty Control Procedures for Deficient Pressurization of TP Zone (Low Zone Pressure)	6–10
470–6.3.4.3	Casualty Control Procedures for Casualty Condition (Emergency Operation)	6–11
470–6.3.4.4	Zone Boosting	6–12
470–6.3.4.5	Isolating TP Zones or Areas Within TP Zones	6–12
470–6.3.4.6	CPS Reset Procedure	6–12
470–6.4	NEW CONSTRUCTION CPS LIMITED PROTECTION (LP) ZONES	6–12
470–6.4.1	LP ZONE DESIGN AND COMPONENTS	6–12
470–6.4.1.1	LP Zone Access	6–13

470–6.4.1.2 LP Zone Excess Exhaust 6–13
470–6.4.1.3 Compressed Air Systems in LP Zones 6–13
470–6.4.1.4 LP Zone HEPA Filter System 6–13
470–6.4.1.5 Other LP Zone Ventilation Components 6–13
470–6.4.2 VENTILATION CONTROL IN LP ZONES 6–13
470–6.5 SELECTED AREA COLLECTIVE PROTECTION SYSTEM (SACPS) 6–13
470–6.5.1 SACPS ZONE DESIGN 6–13
470–6.5.1.1 SACPS Coverage 6–13
470–6.5.1.2 Positive Pressure 6–13
470–6.5.1.4 SACPS Zone Operating Modes 6–13
470–6.5.1.3 SACPS Zone Access 6–14
470–6.5.2 SACPS ZONE COMPONENTS 6–14
470–6.5.2.1 SACPS Supply Fans 6–14
470–6.5.2.2 SACPS Alarm System 6–14
470–6.5.2.3 Drain Traps in SACPS Zones 6–14
470–6.5.2.4 Other SACPS Components 6–14
470–6.5.3 SACPS OPERATIONAL CONDITIONS 6–14
470–6.5.3.1 Normal Operations 6–14
470–6.5.3.2 Excessive Pressurization (Emergency Operation) 6–14
470–6.5.3.3 Casualty Condition (Emergency Operation) 6–14
470–6.6 CPS MAINTENANCE 6–15
470–6.6.1 ORGANIZATIONAL AND INTERMEDIATE LEVEL MAINTENANCE RESPONSIBILITIES 6–15
470–6.6.2 CPS AND SACPS TECHNICAL DOCUMENTATION 6–15
470–6.7 ACCESS TO CPS ZONES 6–15
470–6.7.1 ACCESS CONTROL 6–15
470–6.7.1.1 Air Locks 6–15
470–6.7.1.2 Purging Vapor Contamination from Air Locks 6–15
470–6.7.1.3 Entering and Exiting Air Locks 6–17
470–6.7.1.4 Pressure Locks 6–18
470–6.7.1.5 Revolving Pressure Doors 6–18
470–6.7.1.6 CPS Decontamination Station 6–18
470–6.7.1.7 TP Zone Access 6–18

SECTION 7. CONTAMINATION CONTROL

470–7.1 INTRODUCTION TO CONTAMINATION CONTROL 7–1
470–7.1.1 THE CONCEPT OF CONTAMINATION CONTROL 7–1
470–7.1.2 ELEMENTS OF CONTAMINATION CONTROL 7–1
470–7.1.3 CONTAMINATION AVOIDANCE METHODS 7–1
470–7.1.3.1 Avoidance Maneuvering 7–1
470–7.1.3.2 Contamination Reduction Measures 7–1
470–7.1.3.3 Access Control 7–1
470–7.1.4 BASIC SHIP DECONTAMINATION METHODS 7–1
470–7.1.4.1 Physical Removal 7–1
470–7.1.4.2 Chemical Neutralization 7–2
470–7.1.4.3 Natural Decay 7–2
470–7.1.5 BASIC FUNCTIONS IN PERSONNEL DECONTAMINATION 7–2
470–7.2 CONTAMINATION CONTROL SYSTEMS, EQUIPMENT AND MATERIAL 7–2
470–7.2.1 FIXED SYSTEMS USED IN CONTAMINATION CONTROL 7–2
470–7.2.1.1 The Countermeasures Washdown (CMWD) System 7–3

TABLE OF CONTENTS (Continued)

Paragraph		Page
470–7.2.1.2	Conventional Decontamination (Decon) Station	7–3
470–7.2.1.3	Contamination Control Area (CCA)	7–3
470–7.2.1.4	CPS Decontamination Station	7–4
470–7.2.1.5	Gross Decontamination Area	7–4
470–7.2.2	MATERIAL REQUIREMENTS FOR DECONTAMINATION STATIONS AND CONTAMINATION CONTROL AREAS	7–4
470–7.2.3	EQUIPAGE AND CONSUMABLES USED IN CONTAMINATION CONTROL	7–8
470–7.2.3.1	Calcium Hypochlorite	7–8
470–7.2.3.2	M291 Skin Decontamination Kit (SDK)	7–9
470–7.2.3.3	Contamination Marking Kit	7–11
470–7.3	CONTAMINATION AVOIDANCE	7–11
470–7.3.1	GENERAL COMMENTS ON CONTAMINATION AVOIDANCE	7–11
470–7.3.2	EVASIVE MANEUVERING	7–13
470–7.3.2.1	Shipboard Standoff Chemical Agent Detector	7–13
470–7.3.2.2	VLSTRACK	7–13
470–7.3.3	PREWETTING	7–13
470–7.3.4	PROTECTIVE COVERS	7–13
470–7.3.5	ISOLATION OF CONTAMINATION	7–14
470–7.3.5.1	Isolation of Chemical Contamination	7–14
470–7.3.5.2	Isolation of Biological Contamination	7–14
470–7.3.6	GOOD HYGIENE AND HOUSEKEEPING	7–14
470–7.4	SHIP DECONTAMINATION	7–14
470–7.4.1	GENERAL COMMENTS ON SHIP DECONTAMINATION	7–14
470–7.4.1.1	Weathering	7–14
470–7.4.1.2	Washdown	7–15
470–7.4.1.3	Firehosing	7–15
470–7.4.1.4	Scrubbing and Swabbing	7–16
470–7.4.1.5	Degreasers and Cleaning Solvents	7–16
470–7.4.1.6	Decontamination of Ventilation Filters	7–16
470–7.4.2	GENERAL COMMENTS ON SHIP DECONTAMINATION – BIOLOGICAL	7–17
470–7.4.2.1	Procedures After a Possible Biological Attack	7–17
470–7.4.2.2	Special Considerations for Spores	7–17
470–7.4.3	MANNING FOR SHIP DECONTAMINATION	7–17
470–7.4.4	SAFETY PRECAUTIONS FOR SHIP DECONTAMINATION	7–17
470–7.5	DECONTAMINATION OF PERSONNEL	7–18
470–7.5.1	GENERAL COMMENTS ON PERSONNEL DECONTAMINATION	7–18
470–7.5.2	EMERGENCY PERSONNEL DECONTAMINATION – CHEMICAL	7–18
470–7.5.2.1	Emergency Skin Decontamination	7–18
470–7.5.2.2	Emergency Decontamination of the Eyes	7–18
470–7.5.3	CHEMICAL DECONTAMINATION PROCEDURES FOR PERSONNEL IN A CONVENTIONAL DECONTAMINATION STATION	7–18
470–7.5.3.1	Manning in a Conventional Decontamination Station and CCA	7–19
470–7.5.3.2	Activating a Conventional Decontamination Station or CCA	7–19
470–7.5.3.3	Preparing Calcium Hypochlorite Solutions	7–19
470–7.5.3.4	Gross Personnel Decontamination Procedures	7–20
470–7.5.3.5	Proceeding Through the Contamination Control Area for Removal of CPO	7–21
470–7.5.3.7	Proceeding Through the Decon Station	7–24
470–7.5.3.8	Post-Attack Procedures	7–25

TABLE OF CONTENTS (Continued)

Paragraph		Page
470–7.5.4	PERSONNEL DECONTAMINATION PROCEDURES ON CPS SHIPS	7–25
470–7.5.4.1	Basic Functions of Personnel Decontamination in a CPS Decon Station	7–26
470–7.5.4.2	CPS Decon Station Manning	7–26
470–7.5.4.3	Preparation of CPS Decon Station	7–26
470–7.5.4.4	Processing Personnel Through CPS Decon Station	7–26
470–7.5.4.5	Post-Attack Procedures for the CPS Decon Station	7–27
470–7.5.4.6	Use of an Air Lock for Purging	7–28
470–7.5.4.7	Back-Up Decontamination Procedure After Loss of CPS Decon Station	7–28
470–7.5.5	PERSONNEL DECONTAMINATION – BIOLOGICAL	7–28
470–7.6	CHEMICAL DECONTAMINATION OF UTILITY CLOTHING AND INDIVIDUAL PROTECTIVE EQUIPMENT	7–29
470–7.6.1	GENERAL COMMENTS ON DECONTAMINATION OF UTILITY CLOTHING AND PERSONNEL PROTECTIVE EQUIPMENT	7–29
470–7.6.2	WET WEATHER CLOTHING	7–29
470–7.6.3	PROTECTIVE MASK	7–29
470–7.6.3.1	Wet Method	7–29
470–7.6.3.2	Air Dry Method	7–29
470–7.6.4	CHEMICAL PROTECTIVE GLOVES AND CHEMICAL PROTECTIVE FOOTWEAR COVERS (CPFC'S)	7–29
470–7.6.5	SELF AID AND BUDDY AID ITEMS	7–30
470–7.6.6	UTILITY CLOTHING	7–30
470–7.7	CHEMICAL DECONTAMINATION OF PERSONNEL WEARING AIRCREW OR ARMY PROTECTIVE CLOTHING AND EQUIPMENT	7–30
470–7.7.1	GENERAL	7–30
470–7.7.2	CHEMICAL PROTECTIVE CLOTHING AND EQUIPMENT USED BY NAVY AND MARINE CORPS AIRCREW PERSONNEL	7–30
470–7.7.3	MODIFICATIONS TO THE SHIPBOARD PROCEDURES FOR DECONTAMINATION OF PERSONNEL, CLOTHING AND PORTABLE EQUIPMENT WHEN PROCESSING NAVY HELICOPTER AIRCREW PERSONNEL	7–30
470–7.7.4	ARMY CHEMICAL PROTECTIVE CLOTHING AND EQUIPMENT	7–31
470–7.7.5	SHIPBOARD DECONTAMINATION OF GROUND FORCE PERSONNEL	7–31

SECTION 8. TECHNICAL SUPPORT OF OPERATIONS IN A TOXIC ENVIRONMENT

470–8.1	BALANCING MISSION REQUIREMENTS AND PROTECTIVE POSTURE	8–1
470–8.1.1	RISK MANAGEMENT	8–1
470–8.1.2	MISSION ORIENTED PROTECTIVE POSTURE (MOPP)	8–1
470–8.1.3	PRE-ATTACK THREAT ASSESSMENT	8–2
470–8.2	CONSIDERATIONS IN CHOOSING A PROTECTIVE POSTURE	8–2
470–8.2.1	LOGISTICS CONSIDERATIONS	8–2
470–8.2.2	MANEUVERING	8–2
470–8.2.3	DECONTAMINATION OPTIONS	8–2
470–8.2.4	PERCUTANEOUS VAPOR HAZARD INSIDE THE SHIP	8–3

TABLE OF CONTENTS (Continued)

Paragraph **Page**

APPENDIX A.
GLOSSARY

APPENDIX B.
TECHNICAL MANUAL LISTING FOR CHEMICAL-BIOLOGICAL DEFENSE EQUIPMENT

APPENDIX C.
SHIPBOARD CHEMICAL HAZARD ASSESSMENT GUIDE (C–HAP)

470–C.1	INTRODUCTION	C–1
470–C.2	PURPOSE	C–1
470–C.3	GENERAL	C–1
470–C.4	PRECAUTIONS	C–1
470–C.5	ASSUMPTIONS	C–2
470–C.6	AGENT DESCRIPTIONS	C–2
470–C.7	GENERAL COUNTERMEASURE PROCEDURES	C–2
470–C.8	GENERAL C–HAG USER INSTRUCTIONS	C–4
470–C.9	AGENT IDENTIFICATION	C–4
470–C.10	DECK TEMPERATURE ESTIMATE	C–4
470–C.11	WIND SPEED ESTIMATE	C–5
470–C.12	DECONTAMINATION PROCEDURES	C–5
470–C.13	RESIDUAL HAZARDS	C–5
470–C.14	H AGENTS (MUSTARD)	C–5
470–C.14.1	DESCRIPTION	C–5
470–C.14.2	RECOMMENDED ACTIONS FOR H AGENTS	C–6
470–C.15	G AGENTS	C–6
470–C.15.1	DESCRIPTION	C–6
470–C.15.2	RECOMMENDED ACTIONS FOR G AGENTS	C–11
470–C.16	V AGENT	C–11
470–C.16.1	DESCRIPTION	C–11
470–C.16.2	RECOMMENDED ACTIONS FOR V AGENT	C–16

APPENDIX D.
CHEMICAL AGENT AND RIOT CONTROL COMPOUND DATA SHEETS

APPENDIX E.
HAND–HELD CHEMICAL AGENT SIMULANT TRAINING DISPERSER GUIDELINES FOR USE

470–E.1	PURPOSE	E–1
470–E.2	SAFETY PRECAUTIONS	E–1
470–E.3	STOWAGE	E–1
470–E.4	USE	E–1
470–E.5	REPORTING	E–2
470–E.6	REFERENCES	E–3

LIST OF ILLUSTRATIONS

Figures		Page
470–2–1	Interaction Between Liquid Chemical Agent and Surface Coatings	2–15
470–4–1	Chemical Warfare Directional Detector (CWDD), AN/KAS–1	4–3
470–4–2	Chemical Agent Point Detector System (CAPDS)	4–3
470–4–3	Improved (Chemical Agent) Point Detector System (IPDS)	4–5
470–4–4	M256A1 Detector Kit and Sampler–Detector as Shown on Instruction Card	4–7
470–4–5	M8 Detector Paper	4–12
470–4–6	M9 Detector Paper and Storage Bag	4–12
470–4–7	Chemical Survey Form	4–15
470–4–8	Sample Liquid Agent Monitoring Form	4–16
470–4–9	On–Station Monitoring Form	4–18
470–4–10	Sample Rapid Internal Survey Form	4–20
470–4–11	Sample Rapid External Survey Form (Liquid Agent)	4–22
470–4–12	Interim Biological Agent Detection System (IBADS)	4–25
470–4–13	Biological Survey Form	4–26
470–4–14	Sample Internal Biological Survey Form	4–28
470–4–15	Sample Topside Biological Survey Form	4–29
470–5–1	Chemical Protective Ensemble (CPE)	5–2
470–5–2	MCU–2/P and MCU–2A/P Protective Masks	5–3
470–5–3	Chemical Protective Overgarment Wear Time and Inspection Record	5–10
470–5–4	Advanced Chemical Protective Garment (ACPG)	5–12
470–5–5	ACPG Coat Size Selection Chart	5–13
470–5–6	ACPG Trouser Size Selection Chart	5–14
470–5–7	Advanced Chemical Protective Garment Wear Time and Inspection Record	5–16
470–5–8	Lacing Procedures for the Chemical Protective Footwear Cover	5–19
470–6–1	Typical Coverage and Zoning for a Level III Ship Design	6–2
470–6–2	Typical CPS Total Protection (TP) Zone	6–7
470–6–3	Typical Air Lock Configuration	6–16
470–7–1	Generic Contamination Control Area (CCA) Layout for the One–Cutter Process	7–5
470–7–2	Generic Contamination Control Area (CCA) Layout for the Two–Cutter Process	7–6
470–7–3	Typical CPS Decontamination Station	7–7
470–7–4	Typical CPS Decontamination Station Layout	7–7
470–7–5	Use of the M291 Skin Decontaminating Kit (SDK)	7–10
470–7–6	Contamination Marking Kit	7–12
470–C–1	Estimating Liquid Density of Thickened Chemical Agent	C–3
470–C–2	H Blister Agent Weathering Chart at 90°F	C–8
470–C–3	H Blister Agent Weathering Chart at 60°F	C–9
470–C–4	H Blister Agent Weathering Chart at 30°F	C–10
470–C–5	G Nerve Agent Weathering Chart at 90°F	C–13
470–C–6	G Nerve Agent Weathering Chart at 60°F	C–14
470–C–7	G Nerve Agent Weathering Chart at 30°F	C–15

LIST OF TABLES

Tables		Page
470–2–1	CHEMICAL AGENT AND RIOT CONTROL AGENT SUMMARY	2–2
470–2–2	VOLATILITY OF SELECTED CHEMICAL AGENTS	2–5
470–2–3	VAPOR DENSITY OF SELECTED CHEMICAL AGENTS AND COMMON SHIPBOARD MATERIALS IN ASCENDING ORDER	2–6
470–2–4	COMPARISON OF TOXICITY OF SELECTED CHEMICAL AGENTS	2–10
470–2–5	SHIPBOARD CHEMICAL HAZARD ENVIRONMENTS	2–17
470–3–1	SHIPBOARD BIOLOGICAL HAZARD ENVIRONMENTS	3–7
470–4–1	TIMING OF RAPID INTERNAL SURVEYS	4–19
470–4–2	BIOLOGICAL SAMPLING KIT (BSK)	4–27
470–6–1	ESTIMATED PERCENTAGE OF AGENT REMOVED BY AIR CHANGES	6–4
470–6–2	OPERATIONAL CONDITIONS AND CASUALTY CONTROL	6–9
470–6–3	CPS ZONE ENTRY AND EXIT (ALL PROTECTED ZONES INTACT, TP ZONES PRESSURIZED)	6–19
470–7–1	OUTFITTING FOR CHEMICAL DECONTAMINATION OF 100 INDIVIDUALS	7–8
470–7–2	NUMBER OF SIX OUNCE BOTTLES OF CALCIUM HYPOCHLORITE REQUIRED FOR SOLUTIONS OF VARIOUS STRENGTHS AND VOLUMES	7–9
470–7–3	COLORS USED IN CONTAMINATION MARKINGS	7–12
470–B–1	TECHNICAL MANUAL LISTING FOR CHEMICAL–BIOLOGICAL DEFENSE EQUIPMENT	B–1
470–C–1	H–BLISTER AGENT: ESTIMATE OF HAZARD DURATION (HOURS: MINUTES)	C–7
470–C–2	G–NERVE AGENT: ESTIMATE OF HAZARD DURATION (HOURS: MINUTS)	C–12
470–C–3	V–NERVE AGENT: ESTIMATE OF HAZARD DURATION	C–17

CHAPTER 470
SHIPBOARD BW/CW DEFENSE AND COUNTERMEASURES

SECTION 1.
INTRODUCTION

470–1.1 GENERAL CHARACTERISTICS OF CHEMICAL WARFARE (CW) AND BIOLOGICAL WARFARE (BW)

470–1.1.1 INTRODUCTION. Chemical-biological (CB) warfare defense is not a function that a ship performs in isolation from other tasks. A ship is expected to operate in hazardous environments, including a variety of toxic environments. A chemical or biological environment should be viewed as a potential overlay on any warfare task. It may impair the ability of a ship to perform its assigned mission. The employment of most CB countermeasures and protective equipment makes normal activities and operational evolutions more difficult. The use, or even the threat of use, of chemical or biological weapons may force the ship into a protective posture that degrades its operational capabilities. Commanding Officers face the difficult task of choosing a defensive posture that is appropriate to both the level of the threat and the requirements of the mission. In some situations, the risk of chemical or biological casualties must be accepted to permit accomplishment of a high priority mission, but this risk should always be minimized. Risk management is basically making informed tradeoffs. It is important to understand, not only the capabilities of chemical and biological agents and weapons, but their limitations as well. This knowledge provides the ability to make informed decisions about the level of protection required. Protective measures can then be limited to those that are necessary and their use can be suspended as soon as possible. In this way, the negative impact on operational capability can be minimized. This chapter of Naval Ships' Technical Manual provides technical information needed to make informed decisions in a chemical or biological warfare environment, to properly employ CB countermeasures and to correctly utilize CB defense equipment.

470–1.1.2 CHEMICAL AND BIOLOGICAL WEAPONS. Chemical and biological agents have some similarities that distinguish them from other weapons. There are also some important distinctions. Definitions are in order first.

a. Chemical Agent. A chemical compound that is intended for use in military operations to cause incapacitation, injury or death in humans.

b. Biological Agent. A live microorganism or a toxic compound derived from a biological origin that is intended for use in military operations. Microorganisms are used to cause disease in humans and toxins are used to cause incapacitation, injury or death in humans.

470–1.1.2.1 Unique Characteristics Shared by Chemical and Biological Weapons. The following characteristics of chemical and biological weapons distinguish them from conventional munitions.

a. Area Coverage. Diffusion and downwind transport of agents in liquid, vapor or aerosol form make them effective beyond the point of release. They can spread into targets that are hardened against explosive munitions. Liquids, vapors and aerosols can be used to blanket an area in which individual targets are difficult to locate and attack.

b. Selectivity. The agents discussed in this text have little or no physical effect on structures or equipment. They are specifically targeted for personnel.

c. Contamination. Some CB agents can persist for some time after an attack is over as a toxic residue on shipboard structures and equipment. Although they do not create physical barriers, they can limit access to and

from areas in which they have been deposited. Personnel working in a contaminated area must either risk becoming casualties or accept the decrease in efficiency that results from wearing protective equipment. If not strictly controlled, contamination can be spread rapidly through the ship by personnel movement.

d. Influence of Weather Conditions. The employment of chemical and biological agents is affected by the weather far more than the use of conventional weapons. Some conditions enhance a specific agent's performance, others degrade it.

e. Protection Requirements. Personnel protection equipment for any weapon effect tends to be cumbersome. However, clothing and equipment for protection from CB agents is even more so. It creates a greater likelihood of heat stress, psychological stress and loss of tactility.

470–1.1.2.2 Differences Between Chemical and Biological Weapons. There are several major differences between chemical and biological agents.

a. On a per weapon basis, a biological attack can potentially cover a much greater area to a hazardous level than a corresponding chemical attack.

b. Nearly all biological agents require only respiratory protection, while a number of chemical agents require full body protection.

c. Some diseases caused by potential biological agents (microorganisms) are contagious. They can be spread from one victim to another.

470–1.2 DOCTRINE, PROCEDURES AND TECHNICAL ASPECTS OF CHEMICAL AND BIOLOGICAL WARFARE DEFENSE

470–1.2.1 INTERRELATIONSHIP OF OPERATIONAL AND TECHNICAL ASPECTS OF SHIPBOARD CHEMICAL AND BIOLOGICAL DEFENSE. A unique aspect of chemical-biological defense is the interaction between operational and technical considerations. The fleet's chemical and biological defense capability is the combination of an operational concept, CB defense equipment and shipboard procedures. The operational concept deals with the tactical aspects of ship operations and mission execution in a toxic environment. An understanding of the chemical and biological warfare threats and the nature of post-attack hazard environments is needed to effectively implement the operational concept.

NOTE

The term, threat, is used to describe the capabilities of the chemical and biological weapons that an enemy might use to attack a ship. The term, hazard, refers to a dangerous environment that exists after an attack.

470–1.2.2 DOCUMENTATION. Navy policy for chemical-biological-radiological (CBR) defense is promulgated in OPNAV Instruction S3400.10E. Operational doctrine for shipboard chemical and biological defense is included in **Surface Ship Survivability** (NWP 3–20.31 series). **NSTM Chapter 470**, provides the technical information required to effectively use chemical-biological defense equipment and procedures in support of the operational doctrine. The Preventive Maintenance System (PMS) describes minimum preventive maintenance requirements for CB defense equipment. Technical manuals for individual equipment items, listed in Appendix B, provide specific guidance on the operation and repair of those items. Type commander repair party manuals implement the guidance with clarification and modification for various ship classes as appropriate.

470–1.3 ELEMENTS OF CHEMICAL-BIOLOGICAL DEFENSE

470–1.3.1 DETECTION AND ASSESSMENT. Detection is the function of determining that a chemical or biological attack has occurred and assessment is the function of estimating the severity and expected duration of the hazard that the attack creates. There are six basic functions in the detection and assessment of a chemical or biological attack against a naval ship:

a. Provide warning of an attack so that appropriate protective measures can be taken.

b. Cancel the warning when the attack ceases.

c. Identify the physical state and type of agent so that the nature and anticipated duration of the hazard can be estimated.

d. Identify the locations on the ship where a hazard exists due to contamination so that appropriate control measures can be implemented.

e. Determine if decontamination is necessary and, if so, assess the degree of effectiveness of decontamination efforts.

f. Determine when hazardous conditions have diminished to the point that it is safe to relax protective measures.

Detection equipment and its use are discussed in Section 4.

470–1.3.2 INDIVIDUAL PROTECTION. Individual crew members use chemical protective clothing and equipment to prevent exposure to harmful concentrations of chemical or biological agents. Information on protective clothing and its use is provided in Section 5. The management tool used by command to coordinate the donning and removal of protective clothing is Mission Oriented Protective Posture (MOPP). Under MOPP, various combinations of protective clothing are prescribed in response to the severity and nature of the threat or hazard. NWP 3–20.31D provides guidance in the use of MOPP. This guidance is summarized in Section 8.

470–1.3.3 COLLECTIVE PROTECTION. A number of measures provide protection to the crew in a collective sense. They include prepositioning of CB defense equipment and medical supplies at battle stations, setting the appropriate material condition of readiness, operation of the countermeasures washdown system and closing Circle WILLIAM fittings. These functions are called **collective activities** in NWP 3–20.31D. Their performance is managed under MOPP in accordance with guidance in NWP 3–20–31D. With respect to equipment, which is the focus of Naval Ships' Technical Manual, the term, **Collective Protection System (CPS)**, is used only in reference to a ventilation system that prevents the entry of airborne chemical, biological and radiological contamination into the interior of the ship. Both the CPS and the older, or conventional, type of ventilation system are discussed in Section 6.

470–1.3.4 CONTAMINATION CONTROL. Proper use of contamination control techniques limits the exposure of personnel to CB hazards, limits the impact of a hazardous environment on operational capability and reduces the need to use up expendable CB defense supplies. Contamination control includes:

a. Measures that prevent or reduce the amount of chemical or biological contamination that is deposited on a ship.

b. Procedures that limit exposure to areas on the ship where contamination has been detected or is suspected.

c. Procedures that minimize the transfer of contamination to clean areas.

d. Procedures for removal or reduction in the level of contamination from shipboard surfaces, equipment, personnel and clothing.

Decontamination is only one of several aspects of contamination control. Decontamination is not performed as an end in itself but only as necessary to support mission accomplishment. Contamination control is discussed in Section 7.

470–1.3.5 TRAINING. Regular training in chemical and biological defense can significantly reduce the loss of operational capability that accompanies the wearing of protective clothing and equipment.

470–1.3.5.1 Acclimation. Frequent training in protective clothing and equipment can produce several benefits:

a. Individuals develop higher tolerance to heat stress.

b. Individuals develop confidence in the equipment and their ability to use it properly. This reduces psychological stress.

c. Individuals learn to work around the physical encumbrances of protective clothing.

470–1.3.5.2 Integration. Training should not be limited merely to donning and doffing protective clothing and equipment, but should involve personnel in performing mission-related tasks appropriate to their specialties while wearing protective clothing. Likewise, shipwide and multi-ship training evolutions should not treat CB defense as a separate entity but should overlay the constraints of a chemical or biological hazard environment as an additional challenge in the context of standard mission-related training.

470–1.3.5.3 Detection and Decontamination. An approved training simulant is available for practicing detection and decontamination techniques. The simulant is dispensed from a hand held sprayer that produces realistic agent concentrations and deposition patterns. Guidelines for use of the disperser and training simulant are provided in Appendix E.

470–1.4 SHIPBOARD ORGANIZATION FOR CHEMICAL AND BIOLOGICAL DEFENSE

470–1.4.1 RESPONSIBILITIES FOR CB DEFENSE. Guidance on duties and responsibilities for chemical and biological defense is provided in the sample Ship CBRD Bill in NWP 3–20.31D. The Damage Control Assistant (DCA) is responsible for maintaining the currency of the CBR Defense Bill in coordination with Department Heads and Division Officers.

470–1.4.1.1 General Responsibilities. There is general guidance that applies to all Department Heads and Division Officers. All hands shall be trained in personnel protection, first aid and buddy aid for chemical and biological agents. Each department shall develop the capability to perform all mission responsibilities while fully dressed out in protective clothing. Personnel at any battle station may be required to operate countermeasures washdown system valves or Circle WILLIAM closures in the immediate area.

470–1.4.1.2 Specific Responsibilities. Specific CB defense responsibilities are assigned by NWP 3–20.31D to certain individuals, including the Medical Representative, the Supply Officer and the Damage Control Assistant (DCA).

470–1.4.2 THE DAMAGE CONTROL ORGANIZATION. The damage control (DC) organization, under the Damage Control Assistant (DCA), is composed of full time DC personnel and personnel from other divisions whose DC responsibilities are limited.

470–1.4.2.1 Full-Time DC Personnel. These individuals generally come from the Damage Controlman (DC) and Hull Technician (HT) ratings. They work for the DCA in R division. All have received some training in CB defense. Some have received more in-depth training in CB defense and are certified as shipboard instructors. They are the Shipboard CBR Defense Operations and Training Specialists (NEC DC–4805) and the Senior Enlisted Damage Control Program Management and Training Specialists (NEC DC–4811).

470–1.4.2.2 Part-Time DC Personnel. Personnel who have limited DC responsibilities include divisional Damage Control Petty Officers (DCPO's) and individuals assigned to repair parties.

470–1.4.3 DAMAGE CONTROL RESPONSIBILITIES. The damage control organization's responsibilities for CB defense, under the DCA, fall into three areas.

470–1.4.3.1 Damage Control Administrative Responsibilities. Administrative CB defense functions that are assigned to the damage control organization are as follows:

a. Fitting and issue of protective clothing.

b. Providing training in chemical and biological defense.

c. Maintenance of CB defense equipment. Equipment that is not in the custody of other departments is the responsibility of R Division personnel. Divisional DCPO's maintain some CB defense items, such as Circle WILLIAM fittings that are located in their divisional spaces.

470–1.4.3.2 Damage Control Central Responsibilities. Damage Control (DC) Central manages and coordinates the activities of repair parties and DC watchstanders in CB defense. DC Central is also responsible for CB hazard assessment and making recommendations to the bridge in a CB warfare environment.

470–1.4.3.3 Repair Party Responsibilities. Personnel from repair parties are assigned to the following teams that perform CB defense functions:

a. Monitoring Teams. Monitoring teams conduct surveys to locate and mark chemical or biological agents on board the ship.

b. Decontamination Teams. These teams perform decontamination procedures on the ship and its equipment.

c. Decontamination Station Attendants. They control access to the interior of the ship and direct the decontamination of personnel who have been exposed to chemical or biological contamination.

SECTION 2.
CHEMICAL WARFARE

470–2.1 THE NATURE OF CHEMICAL AGENTS AND CHEMICAL COMPOUNDS

470–2.1.1 CLASSIFICATION OF CHEMICAL AGENTS AND CHEMICAL COMPOUNDS. A chemical agent is a substance that, through chemical reactions in the human body, produces lethal or damaging effects on personnel. Chemical agents are used as weapons of mass destruction to kill, injure, or incapacitate opposing combatant forces. Some chemical compounds used in warfare are not included in this definition of chemical agents. Military chemical compounds used in support functions include riot control agents (RCA's) for control of noncombatants, chemical herbicides for defoliation, smoke screen materials for obscuring visibility and incendiary munitions for resource denial. This chapter of Naval Ships' Technical Manual concentrates on chemical agents and riot control agents (RCA's). There are five basic categorizations, described in paragraphs 470–2.1.1.1 through 470–2.1.1.5, used to characterize these substances. A summary classifying chemical agents and RCA's based on these categories is provided in Table 470–2–1. The characterization of each agent in this table is based on the expected military use of the agent at moderate temperatures. The characterization of the agent might be different in some respects at different concentrations or extreme ambient temperatures.

470–2.1.1.1 Physiological Effects. The most common way to classify chemical agents and RCA's is by the manner in which they affect the human body. The primary categories of chemical agents are nerve (anticholinesterase) agents, blister agents (vesicants), choking agents, blood agents, psychochemical agents and physiochemical agents. The primary categories of RCA's are tear agents and vomiting agents. In order to assist in identification of the agent during an attack, the physiological effects and symptoms of chemical agent exposure are discussed in paragraph 470–2.1.4.6 and in the Chemical Agent and Riot Control Agent Data Sheets in Appendix D. Information on first aid and medical treatment for chemical warfare casualties is provided in NAVMED P–5041**, Treatment of Chemical Agent Casualties and Conventional Military Chemical Injuries (Feb. 1990)**.

470–2.1.1.2 Military Use. Chemical agents fall into two broad categories based on their tactical use: casualty agents and incapacitating agents. Casualty agents cause either deaths or serious injuries that make personnel unavailable for combat duty for a long period of time and place a burden on the medical support system. Casualty agents include nerve agents, blister agents, choking agents and blood agents. Incapacitating agents prevent personnel from performing their duties effectively for hours to days after exposure. Their effects may be physical, mental or both. Incapacitating agents include psychochemical agents and physiochemicals. RCA's are less toxic than chemical agents. RCA's produce temporary disabling or irritating effects that disappear quickly after exposure ends. RCA's include tear agents and vomiting agents.

470–2.1.1.3 Duration of Effectiveness. The persistency of an agent is the measure of the duration of its toxic effects in the area of release, not the duration of its physiological effects in exposed personnel. **Nonpersistent** agents disperse rapidly after release and present an immediate, short duration hazard. **Persistent** agents continue to present a hazard for considerable periods of time after delivery. Weather conditions (rain, wind and temperature) affect the duration of effectiveness of both types of agents. In general, however, the hazard is considered persistent if solid or liquid contamination (in casualty causing concentrations) restricts access to an area long enough after an attack to interfere with the resumption of normal operations.

470–2.1.1.4 Route of Entry. There are two categories into which agents are classified based on whether they can cause injury by skin penetration. An agent that can enter the body only through the respiratory tract, open wounds, the eyes or by ingestion is called a **nonpercutaneous** hazard. It is sometimes called an **inhalation**, or **eye-respiratory** hazard. An agent that can enter the body through unbroken skin or injure the skin directly is called a **percutaneous** hazard, a **contact** hazard or a **skin** hazard. Generally, any agent that can enter the body through the skin is also a eye-respiratory hazard. Percutaneous hazards require the use of a complete protective ensemble, while nonpercutaneous hazards require only the use of a protective mask.

Table 470–2–1. CHEMICAL AGENT AND RIOT CONTROL AGENT SUMMARY

Agent and Symbol	Physio-logical Effects	Military Use	Duration of Effectiveness	Physical State at 68°F	Normal Route of Entry	Onset of Major Effects
Tabun (GA)	Nerve	Casualty	Persistent	Liquid	Eye-respiratory Skin hazard	Quick Acting
Sarin (GB)	Nerve	Casualty	Nonpersistent	Liquid	*Eye-respiratory	Quick Acting
Soman (GD)	Nerve	Casualty	Persistent	Liquid	Skin hazard Eye-respiratory	Quick Acting
GF	Nerve	Casualty	Persistent	Liquid	Skin hazard Eye-respiratory	Quick Acting
VX	Nerve	Casualty	Persistent	Liquid	Skin hazard Eye-respiratory	Quick Acting
Distilled Mustard (HD)	Blister	Casualty	Persistent	Liquid	Skin hazard Eye-respiratory	Delayed
Nitrogen Mustards (HN 1,2,3)	Blister	Casualty	Persistent	Liquid	Skin hazard Eye-respiratory	Delayed
Lewisite (L)	Blister	Casualty	Persistent	Liquid	Skin hazard Eye-respiratory	Quick Acting
Mustard-Lewisite Mixture (HL)	Blister	Casualty	Persistent	Liquid	Skin hazard Eye-respiratory	Quick Acting
Phosgene Oxime (CX)	Blister	Casualty	Nonpersistent	Solid or liquid	Skin hazard Eye-respiratory	Quick Acting
Hydrogen Cyanide (AC)	Blood	Casualty	Nonpersistent	Gas	*Eye-respiratory	Quick Acting
Cyanogen Chloride (CK)	Blood	Casualty	Nonpersistent	Gas	Eye-respiratory	Quick Acting
Arsine (SA)	Blood	Casualty	Nonpersistent	Gas	Eye-respiratory	**Delayed
Phosgene (CG)	Choking	Casualty	Nonpersistent	Gas	Eye-respiratory	Delayed
Diphosgene (DP)	Choking	Casualty	Nonpersistent	Liquid	Eye-respiratory	**Delayed
BZ	Psycho-chemical	Incapacitating	Nonpersistent	Solid	Eye-respiratory	Delayed
Adamsite (DM)	Vomiting	Riot Control	Nonpersistent	Solid	Eye-respiratory	Quick Acting
O-chlorobenzal-malononitrile (CS)	Tear	Riot Control	Nonpersistent	Solid	Eye-respiratory Skin irritant	Quick Acting
Diphenyl-chloroarsine (DA)	Vomiting	Riot Control	Nonpersistent	Solid	Eye-respiratory Skin irritant	Quick Acting
Chloropicrin (PS)	Tear	Riot Control	Nonpersistent	Liquid	Eye-respiratory Skin hazard	Quick Acting

* Normally encountered as a vapor but liquid form could be present and is highly toxic to skin.

** There are prompt effects but major effects are delayed. See agent data sheet in Appendix D.

470–2.1.1.5 Onset of Effects. An agent is classified as either quick acting or delayed acting based on how quickly a field concentration of the agent can produce the intended effect in unprotected personnel. Some agents can produce physiological reactions immediately while the effects of other agents are delayed. Most chemical agents work very quickly after exposure to a sufficiently high concentration but there are a few exceptions. For some agents, even after exposure to a high concentration, the more severe symptoms may not appear for hours.

470–2.1.2 THE PHYSICAL STATE OF CHEMICAL AGENTS AND CHEMICAL COMPOUNDS. The term, **poison gas**, is often used to describe chemical agents but it is somewhat misleading. Actually, most agents are stored as liquids, both in bulk storage and in chemical filled munitions. These agents are released from chemical weapons as liquids and may arrive on the target as liquid droplets, aerosols, vapors (gases) or in some combination of these forms. Some agents can be stored and disseminated as solids. Chemical agents are toxic in any physical state.

470–2.1.2.1 Changes of Physical State. Chemical agents undergo state changes like other substances. At temperatures below the freezing point of each agent, it exists as a solid. When the temperature rises above the freezing point, the substance begins to melt, becoming a liquid.

NOTE

Chemical agent vapor can be present at temperatures below the boiling point due to evaporation and, in very small amounts, below the freezing point due to sublimation.

470–2.1.2.1.1 Evaporation is the process by which a liquid becomes a gas. At temperatures below the boiling point of the liquid, evaporation takes place at the surface of the liquid, where some molecules break free and enter the gaseous state. The rate of evaporation increases as the temperature increases. At the boiling point, gas bubbles form beneath the surface of the liquid and break free in a turbulent manner.

470–2.1.2.1.2 Sublimation is a process similar to evaporation in which molecules of a solid are released as a gas without going through the liquid state.

470–2.1.2.1.3 Condensation is the reverse of evaporation. Because of a drop in the temperature or exposure to a cool surface, vapor becomes liquid.

470–2.1.2.1.4 The physical state of individual agents at 68° F (20° C) is provided in Table 470–2–1 because this temperature provides a reference point in the moderate range and an indication of the physical state in which each agent is stored inside munitions. It does not mean that the agent remains only in that form after release, even at that temperature.

470–2.1.2.2 Aerosols. Some chemical agents can be disseminated as aerosols. An aerosol is a suspension of small solid particles or liquid droplets in air. In other words, the physical state of the agent is actually solid or liquid but the particles are small enough that they can remain airborne for several minutes to several hours. Thus, an aerosol acts like a gas in several ways. Agent vapor is present with the aerosol due to evaporation from the droplets or sublimation from the particles.

470–2.1.2.3 Relationship Between Physical State, Persistency and Route of Entry. The physical form of an agent is important in determining whether it is a percutaneous or non-percutaneous hazard. Almost all agents are percutaneous hazards when they are in liquid form. All agents in the vapor state are inhalation hazards. Some agents, if they are toxic enough and can achieve and maintain high enough vapor concentrations, can also be percutaneous vapor hazards. However, with most agents, such high concentrations cannot normally be achieved.

470–2.1.2.3.1 If the agent is deposited as a liquid, it is a percutaneous hazard regardless of whether it is persistent or nonpersistent. If it is nonpersistent, the percutaneous hazard will diminish quickly. If it arrives as a vapor, or aerosol, it is, as a minimum, a nonpercutaneous hazard. In a few cases, the vapor can be a percutaneous hazard as well. Conceivably, the vapors of any chemical agent could pose a percutaneous hazard at high concentrations. However, as a practical matter, it is not possible to achieve and maintain the necessary vapor concentration on target with most agents.

470–2.1.2.3.2 A persistent agent, which generally arrives as a liquid, creates a percutaneous (skin) **contact hazard** that lasts for some time. Evaporation occurs while the liquid droplets are enroute to the target area, so a vapor hazard arrives simultaneously with the contact hazard. Vapor continues to develop as long as liquid agent is present on the ship's weather surfaces. Thus, a percutaneous liquid hazard is usually accompanied by offgassing that is most likely an **eye–respiratory vapor hazard** and may be a **percutaneous vapor hazard** as well.

470–2.1.2.4 Water as an Example of a Substance Occurring in Different Physical Forms. Water is a substance that occurs in forms familiar to everyone in all three physical states and as an aerosol. It can be used to illustrate the forms in which chemical agents can be encountered. Water freezes to solid ice at 32º F. It boils to vapor at sea level at 212° F. However, water vapor is present in air at temperatures below the boiling point. It is even present at temperatures below the freezing point due to sublimation. A frost-free refrigerator provides an example. Frost in the freezer transforms directly to vapor without becoming a liquid. The water vapor is vented out of the freezer compartment. Ice cubes can shrink due to sublimation if left in a frost free freezer for a long time.

470–2.1.2.4.1 The amount of water vapor the atmosphere can hold depends on the temperature. The higher the temperature, the more moisture the air can hold. Water vapor is a colorless gas. In order to be visible, it must condense. Water vapor first condenses into small aerosol droplets that remain airborne. They are visible as haze, clouds or fog. When fog droplets combine into drops that are too large to remain airborne, precipitation, or rain, results.

470–2.1.2.4.2 Clarification is needed here to avoid confusion. Although water provides a good example for understanding the state changes of chemical agents, the comparison can be carried too far. For example, an aerosol produced by a chemical weapon is different from a naturally occurring haze. A natural haze, composed of water droplets, is visible because it can cover many square miles at a fairly uniform density. A chemical agent aerosol, on the other hand, may be invisible because, as it spreads, its density decreases. Although the principles of state changes are the same for both water and chemical agents, the conditions under which such changes occur are different. The next paragraph describes the properties of chemical agents that determine their behavior under various conditions.

470–2.1.3 THE PHYSICAL AND CHEMICAL PROPERTIES OF CHEMICAL AGENTS. Many different chemical agents are known to exist. The physical and chemical properties of these agents vary widely. Not only are the characteristics of each agent different from those of other agents but a single agent can exhibit different properties under different environmental conditions. Each agent's physical and chemical properties determine the most effective way to deliver the agent on a target and the nature of the problems it presents to naval forces. An appreciation for these properties is necessary to understand the impact a chemical attack can have on the operational capabilities of a ship and to effectively use the defensive measures that are available. The following subordinate paragraphs discuss these properties and their significance in chemical warfare. The characteristics of individual chemical agents are provided in chemical agent data sheets in Appendix D.

470–2.1.3.1 Volatility. An agent's volatility is a measure of how readily it evaporates. Agents that are highly volatile and evaporate quickly are classified as nonpersistent. They do not leave any residue and do not require decontamination except, possibly, aeration. Agents that do not evaporate quickly are categorized as persistent. They remain in liquid or solid form longer and constitute a residual contamination problem. Volatility is represented as a weight of vapor present in a unit volume measured in milligrams of material per cubic meter (mg/m^3) at a specified temperature. A comparison of the volatility of several chemical agents is provided in Table 470–2–2. An agent with a high number is volatile and nonpersistent. An agent with a low number has low volatility and is persistent. All agents listed are neat (unthickened) agents. A thickened agent contains an additive that makes it less volatile and more persistent than its neat counterpart. Thickened agents are discussed further in paragraph 470–2.1.3.2.

470–2.1.3.1.1 Generally, the higher the boiling point and freezing point of a chemical agent are, the lower is its volatility. See Table 470–2–2.

470–2.1.3.1.2 The rate of evaporation of any substance depends on several factors, including the amount of the substance already in the air in vapor form. The more there is in the air, the slower the substance evaporates.

Before a chemical attack, there is **no** agent vapor in the atmosphere, so the air readily accepts the vapor. The agent is not likely to recondense unless a very high vapor concentration can be maintained on the target, which is highly unlikely.

NOTE

Liquid chemical agents may evaporate faster than water even if they are less volatile than water. This is because there is always some water vapor in the atmosphere and this inhibits the evaporation of water. On humid days, when the amount of water vapor in the air is relatively high, water may evaporate slowly and may readily condense on cool surfaces. However, the rate of evaporation or condensation of a chemical agent is not affected by the amount of water vapor present, only by the amount of vapor of that agent that is present. For example, as Table 470–2–2 shows, the volatility of Sarin (GB) is slightly lower than that of water. However, GB normally evaporates faster than water.

Table 470–2–2. VOLATILITY OF SELECTED CHEMICAL AGENTS

Agent	Symbol	Freezing Point in ºC	Boiling Point in ºC	Volatility in mg/m^3 at 25ºC
Arsine	SA	–116	–62.5	51,200,000 *
Phosgene	CG	–128	7.6	7,480,000 *
Cyanogen Chloride	CK	–6.9	12.8	6,132,000
Gasoline **				1,320,000 *
Hydrogen Cyanide	AC	–13.3	25.7	1,080,000
Diphosgene	DP	–57	127	60,700 *
Water	H_2O	0	100	23,010
Sarin	GB	–56	158	22,000
Lewisite	L	–18	190	6,360 *
Mustard-Lewisite	HL	About –25	About 190	3,950 *
Soman	GD	–42	198	3,900
Distilled Mustard	HD	14.45	217	910 *
Tabun	GA	–50	240	610
GF	GF	–30	239	581
VX	VX	Below –51	298	10.5
BZ	BZ	167.5	320	negligible

VALUES MAY VARY BASED ON AGENT PURITY, THE PROPERTIES OF ADDITIVES SUCH AS THICKENERS AND THE PROPORTIONS OF COMPONENTS IN MIXTURES.

* Some volatilities in this table were extrapolated in order to allow comparison of agents under uniform conditions (25ºC).

** Gasoline is included in this table to provide a familiar reference point that is highly volatile. It is a complex mixture of organic compounds. The physical and chemical properties of its components vary widely. Therefore, freezing and boiling points are not provided, and the volatility shown was calculated based on representative assumptions.

470–2.1.3.1.3 The volatility and, therefore, the persistency, of an agent are affected by the weather. Temperature is the main environmental influence. The higher the temperature, the faster it evaporates. Direct sunlight dramatically increases deck temperatures. Wind can also increase the rate of evaporation, but its influence on volatility is not as great as that of temperature. Humidity is not a significant factor, as explained in paragraph

470–2.1.3.1.2 and the note that follows it. The removal of chemical contamination by natural evaporation and decomposition is called weathering. Weathering is passive decontamination. Information on weathering for several types of agents is provided in Appendix C.

470–2.1.3.2 Viscosity. The viscosity of a liquid agent is a measure of its resistance to flow. The more viscous an agent is, the less it will tend to spread over a surface. The viscosity of some agents is similar to that of water. Others resemble motor oil or syrup. Thickeners are mixed with some chemical agents to increase their viscosity. An agent's viscosity affects its performance in a number of ways:

a. Increasing an agent's viscosity reduces the total surface area of the agent droplets because they do not spread as easily. This reduces the rate of evaporation and, therefore, makes the agent more persistent.

b. Some viscous agents may adhere to shipboard surfaces and resist physical removal techniques.

c. Increasing an agent's viscosity increases the accuracy of delivering the agent to the target. Viscous agents form relatively large droplets that settle quickly and do not tend to float away.

d. Highly viscous agents do not spread rapidly over a surface and this makes them soak into porous materials more slowly than less viscous liquids.

e. Viscosity is affected by weather, primarily the temperature. Viscosity decreases as the temperature rises. That is why light weight motor oils are used in automobile engines in winter, heavier weight oils in summer.

470–2.1.3.3 Vapor Density. An agent's vapor density is the ratio of the density of the agent in gaseous form to the density of air under identical conditions of temperature and atmospheric pressure. Any agent that has a vapor density greater than one is heavier than air. The higher this number is, the heavier is the agent's vapor and the more likely it is that the vapor will create a lingering hazard by settling in poorly ventilated areas in a compartment. Table 470–2–3 provides the vapor densities of a number of agents.

Table 470–2–3. VAPOR DENSITY OF SELECTED CHEMICAL AGENTS AND COMMON SHIPBOARD MATERIALS IN ASCENDING ORDER

Agent or Material	Symbol	Vapor Density
Water	H_2O	0.62
Hydrogen Cyanide	AC	0.93
Air		1.0
Cyanogen Chloride	CK	2.1
Arsine	SA	2.69
Gasoline*		2.7–4.1**
Freon	R–22	2.98
Phosgene	CG	3.4
Freon	R–12	4.16
Sarin	GB	4.86
Distilled Mustard	HD	5.4
Tabun	GA	5.63
GF	GF	6.2
Soman	GD	6.33
Degreaser	R–113	6.45
Mustard-Lewisite	HL	6.5
Diphosgene	DP	6.8
Lewisite	L	7.1
VX	VX	9.2

* Major aromatic components
** Approximate range

470–2.1.3.4 Reactivity. Several types of chemical reactions that are important in understanding a chemical agent's behavior are discussed here.

470–2.1.3.4.1 Chemical reactions that cause chemical agents to decompose are important in decontamination. Most chemical agents can be decomposed by strong oxidizers, such as bleaches. Some agents can be decomposed by reacting with water. This process is called hydrolysis.

470–2.1.3.4.2 Some chemical agents in liquid form can damage electronic circuit boards, but exposure to chemical agent vapor alone or in combination with water vapor does not induce failure in these components. Some reactions between agents and other shipboard materials may occur, such as slight corrosion of metals. However, the practical risk of these reactions is low.

470–2.1.3.5 Solubility. Decontamination procedures for some liquid agents include normal cleaning procedures. Agents that are soluble in water are easier to remove by mechanical action, such as scrubbing, with water. Detergents may be used to increase the solubility of some agents in water. Many agents are soluble in organic solvents, such as cleaning fluid, but the availability of such solvents on board ship is limited by safety concerns.

470–2.1.3.6 Sorbability. The tendency of an agent to soak into a solid is an important consideration in chemical warfare. There are two types of sorption: **ad**sorption, which results in a film of agent on the surface and in cracks and crevices of the material, and **ab**sorption, in which the agent penetrates into the body of the material. Adsorption occurs fairly rapidly. Absorption then proceeds more slowly. Agent can be sorbed in either liquid or vapor form. Desorption is the opposite of sorption. In this process, agents are gradually released from the material into which they have been sorbed.

470–2.1.3.6.1 The sorbability of an agent is a concern in decontamination. The faster the agent soaks into paint or non-skid deck coating, the harder it is to remove. This process is discussed in paragraph 470–2.1.4.4.1.

470–2.1.3.6.2 An agent's sorbability can be a factor in its delivery. Some agents in liquid form can be sorbed onto small particles of silica to be released as an aerosol. Such particles can sorb about twice their weight in liquid agent. The term, **dusty agent**, is often used to describe this threat.

470–2.1.3.6.3 The process of adsorption is used in chemical agent filtration. Activated charcoal is used in the filters on protective masks and in a layer in the fabric of permeable protective clothing to entrap agents by adsorption. Also, the filters in the Collective Protection System (CPS), described in Section 6, contain a charcoal bed that adsorbs chemical agents.

470–2.1.3.7 Flammability. The ease with which an agent burns is an important consideration when it is delivered by a bursting or impacting munition. If the agent is flammable, it could be destroyed by the detonation, especially if the explosion starts a fire. The flash point of a chemical agent is an indication of its flammability. The flash point is defined as the temperature at which the agent gives off enough vapors to ignite in the presence of oxygen and an ignition source. The lower the flash point, the more readily the agent burns and is destroyed.

470–2.1.3.8 Sensory Detection. Some agents have a characteristic color or odor and can be detected by the senses of sight or smell. However, this is not true in many cases, so human senses cannot be depended upon as a reliable means of detecting a chemical attack. Even if an agent does have a distinct odor, it may rapidly interfere with the sense of smell and create a false impression that the agent has dissipated. The sense of touch cannot be relied upon to provide an immediate indication of the presence of a chemical agent. Many agents do not produce any sensation when they contact the skin or mucous membranes, and the effects of some agents that cause irritation are delayed. In view of this, and the fact that many agents are colorless and odorless, other means of detection are required.

470–2.1.4 THE TOXIC PROPERTIES OF CHEMICAL AGENTS. The toxicity of a chemical agent is a measure of its potency, or strength. The total amount of agent to which an individual is exposed in a given time is called a dose. The more toxic an agent is, the lower the dose required to cause incapacitation or death. There is wide variation in toxicity among different agents. A dose that is lethal with one agent might not produce any

noticeable effects with another. Different units are used to measure a dose depending on the physical state in which the agent is contacted. Paragraphs 470–2.1.4.3 and 470–2.1.4.4 describe the units for vapor and liquid agent doses, respectively.

470–2.1.4.1 Cumulative Effects. The concept of a cumulative exposure, or cumulative dose, is a familiar one from radiological calculations for nuclear warfare. In essence, repeated exposures in a relatively short time have an additive effect. When the total dose exceeds certain thresholds within the applicable time frame, some degree of incapacitation is likely. The total dose can become large enough that recovery is unlikely and death is the probable result. Conversely, if the total dose remains below the level required to produce incapacitation, there may be little or no impact on a person's ability to function. The amount of time in which repeated exposures are cumulative varies for each agent. The next paragraph explains.

470–2.1.4.2 Detoxification of Chemical Agents in the Body. The human body can detoxify some chemical agents. In other words, the metabolic process can, given sufficient time, remove some agents from the body. If the body is exposed to the same agent before it has time to detoxify the dose received in previous exposures, the effect is additive, or cumulative. Some agents are detoxified in minutes. Others require days, weeks or months to be removed from the body, after causing irreversible damage in some cases. Also, the same dose of a given agent can affect individuals differently based primarily on their age, gender, weight and physical condition.

470–2.1.4.3 Vapor Dose. If the agent is contacted as a vapor, the dose is the product of the concentration (C) and the time of exposure (t), or Ct. The agent's concentration is measured in milligrams per cubic meter (mg/m^3) and the time of exposure is measured in minutes (min). The dose, or Ct, is measured in milligram-minutes per cubic meter ($mg\text{-}min/m^3$). Time is a factor in the measurement of a vapor dose because of the cumulative effect most agents have in the human body. A lower concentration simply requires a longer exposure time to produce the same total dose as a higher concentration over a shorter time frame. For example, a concentration of 1 mg/m^3 maintained for 10 minutes results in a dose of 10 $mg\text{-}min/m^3$, or Ct=10. A concentration of 10 mg/m^3 has to be maintained for only one minute to yield the same dose.

470–2.1.4.3.1 Inhalation doses are defined for virtually all chemical agents. In addition to inhalation doses, skin doses are defined for those agents that are percutaneous hazards in vapor form. Eye doses are defined if applicable.

470–2.1.4.3.2 Incapacitation occurs when the symptoms are so severe that personnel are no longer able to perform their duties. The dose at which this is expected to occur in 50 percent of exposed, unprotected personnel is called the Median Incapacitating Dose. It is represented by the symbol, ICt_{50} for agents in vapor form.

470–2.1.4.3.3 The vapor dose at which 50 percent of exposed, unprotected personnel are expected to die is called the Median Lethal Dose, or LCt_{50}.

470–2.1.4.4 Liquid Agent Dose. Agents that arrive on the target in liquid form are absorbed through the skin. Different source documents use various units to measure liquid agent doses. The most common is milligrams per kilogram (mg/kg), or milligrams of agent per kilogram of body weight. Some texts use grams per man (g/man), which assumes an average person of 70 kg (187.5 lbs.).

470–2.1.4.4.1 The liquid dose at which 50 percent of exposed, unprotected personnel are expected to become incapacitated is called the Median Incapacitating Dose. It is represented by the symbol, ID_{50}.

470–2.1.4.4.2 The liquid agent dose at which 50 percent of exposed, unprotected personnel are expected to die is the Median Lethal Dose, or LD_{50}.

NOTE

The incapacitating or lethal dose can be defined at any percentage. For example, the dose at which **all** exposed personnel are expected to become incapacitated is called the ICt_{100} (vapor) or the ID_{100} (liquid agent). However, the median dose, at which 50 percent of exposed personnel are expected to become incapacitated or die, is the one normally provided in agent data. It best represents the average response of a group of people. It takes into account the fact that a lethal or incapacitating dose to one person might produce no apparent effects in another.

470–2.1.4.5 Toxicity Data on Individual Chemical Agents. Toxicity data on several chemical warfare agents is provided in the chemical agent data sheets in Appendix D. A summary is provided in Table 470–2–4. Median doses are used as the basis for comparison.

470–2.1.4.5.1 Doses are generally defined for personnel in either normal clothing or combat clothing without chemical protection. Different breathing rates, i.e., at rest or at different work rates, may be defined. If available, data presented in Table 470–2–4 is based on personnel engaged in activity that produces a moderate breathing rate.

470–2.1.4.5.2 Although toxicity estimates are considered valid for large groups of people, individual responses to a given dose will vary based on age, size, gender and physical condition. Some individuals are naturally less sensitive to a given dose of a particular agent than others, just as some people are less sensitive to insect stings. Also, the skin on some parts of the body is more resistant than in other areas to penetration by percutaneous chemical agents. There should be an awareness of these limitations on toxicity data among decision makers and damage control personnel.

470–2.1.4.6 Physiology and Symptoms. The symptoms described here are generalized for each class of chemical agents. This information is provided for use in identifying an agent during a surprise attack. Specific symptoms of each agent are described in the chemical agent data sheets in Appendix D. The primary reference for agent symptoms is NAVMED P–5041, **Treatment of Chemical Agent Casualties and Conventional Military Chemical Injuries**.

470–2.1.4.6.1 Nerve Agents. These casualty agents are closely related to a group of commonly used pesticides that includes Malathion. They disrupt the transmission of nerve impulses and produce systemic effects. That is, they can affect the entire body, not just the exposed areas. The damaging effects are primarily on bodily functions rather than on body tissue. Mild exposure to nerve agent vapor through inhalation or eye contact can cause myosis, in which the pupils contract to pinpoints, impairing vision. Other symptoms of mild exposure, which can occur from either inhalation or skin contact, include headache, involuntary muscular twitching, tightness in the chest and secretion of mucous from the nose and saliva from the mouth. Moderate exposure can cause difficulty in breathing and nausea. Severe poisoning causes involuntary defecation and urination, convulsions, paralysis of the respiratory muscles and mental impairment. Death may occur within minutes after severe exposure.

470–2.1.4.6.2 Blister Agents. Blister agents, or vesicants, are casualty agents that can produce both damage to body tissue in the area of contact, causing severe pain, and systemic effects. There may be a latent period after exposure before any symptoms appear. Local skin damage progresses from redness and irritation, to blisters, to decay. In the eyes, vesicants produce inflammation, intolerance of light and, possibly, permanent impairment of sight. Vesicants irritate the mucous membranes in the respiratory tract, causing secretions. Initial symptoms are a runny nose, sore throat and hoarseness. Symptoms may progress to paralysis of the vocal cords, difficulty in breathing due to swelling and accumulation of mucous, and susceptibility to respiratory infections such as pneumonia. Vesicants can also destroy mucous membranes in the gastro-intestinal tract, causing vomiting, pain, bloody diarrhea and exhaustion. Shock may occur as a result. Systemic effects include headache, nausea, stomach pain and anemia. Death may occur from complications caused by the damage to the tissues but, in many cases, the result will be slow healing injuries and scar tissue that require a great deal of care.

470–2.1.4.6.3 Blood Agents. These casualty agents attack an enzyme that is important in the transfer of oxygen from the bloodstream to the cells of the body, causing cells to be starved for oxygen. This condition is called anoxia. Since nerve cells are particularly sensitive to a lack of oxygen, systemic effects are likely to appear first, including convulsions, accompanied by a low pulse rate. Depending on the agent, the breathing rate may either become rapid or choking may cause it to become labored. This is the active phase of blood agent poisoning. A passive phase follows in which the victim suffers from a lack of energy, falling blood pressure and difficulty in breathing. If the victim has received a lethal dose, cessation of breathing follows.

Table 470–2–4. COMPARISON OF TOXICITY OF SELECTED CHEMICAL AGENTS

Agent	Symbol	*Inhalation LCt_{50} in mg–min/m^3(Vapor)	Percutaneous LCt_{50} in mg–min/m^3(Vapor)	Percutaneous LD_{50} (Liquid)
Cyanogen Chloride	CK	11,000		
Arsine	SA	5,000		
Phosgene	CG	3,200		
Diphosgene	DP	***3,000		
Distilled Mustard	HD	1,500	10,000	7 g/man
Mustard-Lewisite	HL	1,500	above 10,000	
Lewisite	L	1,200 to 1500	100,000	30 mg/kg or 2.1 g/man
Hydrogen Cyanide	**AC	2,000 at a concentration of 200 mg/m^3		
Tabun	GA	***400	20,000 to 40,000	1–1.5 g/man
Sarin	GB	70	15,000	1.7 g/man
Soman	GD	70	about 10,000	1.4 g/man
VX	VX	30	6 to 3600	****10 mg/man

* Lethal dose by inhalation may vary with work or breathing rate.
** AC Toxicity varies with concentration due to rapid detoxification in human body.
*** Personnel at rest
**** Bare skin

470–2.1.4.6.4 Choking Agents. These agents are casualty agents. The initial symptoms caused by some choking agents are tears, dry throat, coughing, tightness of the chest, nausea, vomiting and headache. These symptoms quickly disappear as the agent dissipates. Some choking agents produce no early symptoms. Delayed effects on the lungs normally appear two to six hours after exposure. Then as the air sacs in the lungs begin to fill with fluid that excludes air, the victim suffers from oxygen deficiency (anoxia). As this condition develops, the victim may show signs of uneasiness or fear as he tries to cope with the sensation of drowning. His breathing becomes rapid and shallow. He coughs up large quantities of fluid. If any of this fluid is swallowed, it causes nausea, vomiting and stomach pain. If the victim dies, it usually occurs within 24 hours after exposure to the agent. If he survives beyond this period, he is likely to recover.

470–2.1.4.6.5 Psychochemical Agents. The symptoms of these incapacitating agents may be physiological or psychological. In either case, they interfere with the ability to think and act rationally. These agents operate by either suppressing or overstimulating the central nervous system. The effects last for hours to days after exposure but no permanent damage results.

470–2.1.4.6.6 Physiochemical Agents. These incapacitating agents are synthetic products that are similar to chemicals that are released by the human central nervous system in response to a strong emotional stimulus. These agents give a false alarm signal to the body. The body responds with a strong emotional and physical reaction such as fear or rage, that interferes with judgment and control.

470–2.1.4.6.7 Vomiting Agents. These riot control agents cause a series of symptoms. The first symptoms are irritation of the eyes and mucous membranes, such as the linings of the mouth and nose. Then a runny nose develops followed by sneezing and coughing. Next, the victim is likely to experience a severe headache, followed by tightness of the chest and, possibly, severe chest pain. Finally, nausea and vomiting occur. The effects of moderate exposure last about 30 minutes after the victim leaves the contaminated atmosphere. The effects of

severe exposure can last several hours. Vomiting agents rarely cause serious illness or death except in a confined space, where the victim suffers from lack of oxygen.

470–2.1.4.6.8 Tear Agents. These riot control agents cause tears to flow and may also irritate the skin, especially moist parts of the body. Skin irritation may take the form of itching, stinging or a burning sensation. Some agents irritate the nose and throat as well. The effects do not last long after exposure to the agent ceases. Tear agents rarely cause serious illness or death except in a confined space, where the victim is starved for oxygen.

470–2.2 CHEMICAL WEAPON SYSTEMS: THE RELEASE, TRAVEL AND DEPOSITION OF CHEMICAL AGENTS

470–2.2.1 INTRODUCTION. A chemical weapon system consists of a chemical agent, the vehicle that carries it to the point of release and the mechanism that disperses it at the release point. The following paragraphs focus on the mechanics of dispersion.

470–2.2.2 CHEMICAL WEAPON SYSTEMS. There are two primary methods of deploying chemical agents: bursting type munitions and spray devices. Bursting chemical munitions usually have an outer shell filled with a chemical agent and a central bursting charge of conventional explosive to disperse the agent. Bursting chemical munitions may be fuzed for an air burst to cover an area or for impact on the target. Almost any weapon system can be used to deliver chemical agents with a bursting charge. Agents may be carried in missiles, rockets, artillery shells, bombs, submunitions (bomblets) and mines. The other primary means of chemical agent dissemination is by spray devices. They include spray tanks mounted on aircraft, aerosol generators mounted on surface platforms, and bombs and missiles that disseminate agent by venting instead of bursting. For some agents, dissemination can be performed by thermal devices, which use combustion gases to force the agent through outlet nozzles or by compressed air dispersers but, for all practical purposes, the pattern of dissemination is the same as that of a spray device. The following subparagraphs characterize chemical weapon systems by the pattern of agent dissemination.

470–2.2.2.1 Point Source. A point source weapon disseminates agent from a single point. Bursting point source munitions include missile warheads, artillery shells, naval gun projectiles and bombs. Each can be fuzed for an airburst, impact detonation or penetration into the ship's hull. A spray device at a fixed location can also be considered a point source but it can release agent over an extended period of time compared to bursting munitions.

470–2.2.2.2 Multiple Point Source. Multiple point source weapons release a number of bursting devices or submunitions that are distributed over a target area. Examples are cluster bombs and multiple rocket launchers.

470–2.2.2.3 Line Source. Line source dissemination of agents can be accomplished with spray devices carried by aircraft, submarines, patrol boats, missiles, bombs or drone aircraft. A crop dusting aircraft releasing insecticides is a related example.

470–2.2.3 CHEMICAL ATTACKS ON SHIPS. A chemical agent's physical and chemical properties and the intended effect determine the most effective weapon systems for its delivery. Given the weapon systems available to an enemy for delivering particular chemical agents, the operational scenario determines what type of attack is most likely.

470–2.2.3.1 Nonpersistent Agents. Nonpersistent agents evaporate and dissipate readily. They normally require a high initial vapor concentration on target to be effective. At the first sign of an attack, target personnel are likely to adopt a protective posture that negates the effect of a lower concentration. Thus, it is necessary that the initial attack achieve a high enough concentration on the target to produce casualties quickly. This can be achieved with either a precision guided weapon that puts the munitions directly on the target or a saturation attack that puts enough rounds in the target area to achieve a high initial concentration. Although a lower concentration over a longer period of time would be just as effective against unprotected personnel, repeated strikes would be necessary to maintain a sufficient concentration.

470–2.2.3.2 Persistent Agents. Persistent agents arrive on target in the form of liquid droplets that contaminate the surfaces on which they land. A single air bursting weapon or a spray device can cover a large area with an

effective concentration. However, a saturation attack could be used to achieve a higher concentration of liquid agent on target or to produce more agent vapor in the target area as liquid agent evaporates. The level of surface contamination resulting from such an attack (liquid density) is measured in grams of liquid agent per square meter (g/m^2). The density will be higher near the point of release, lower downwind.

470–2.2.3.3 Chemical Attack Scenarios from a Defensive Viewpoint. As described in the preceding paragraphs, chemical weapon systems have traditionally been classified as point sources, multiple point sources or line sources that are either bursting munitions or spray devices. These classifications are more relevant to the planner who intends to employ chemical weapons than to a ship or land force that must defend itself against them. From the point of view of the ship, the primary concern is where the release point is in relation to the ship. There are two possibilities.

a. The chemical weapon explodes in the immediate vicinity of the ship, possibly on impact or after penetrating the ship's hull. The release of agent is accompanied by other weapon effects, i.e., blast and fire. The result is a toxic chemical environment superimposed on structural damage and, possibly, fire and flooding.

b. Chemical agent is disseminated by standoff delivery, in which agent is released in the atmosphere and then moves under the influence of gravity and with the wind to achieve coverage of a target area. Chemical agent vapor, liquid droplets and solid particles can be disseminated in this manner. A release by any spray type device would fall into this category, as would a munition that bursts far enough away from the ship that no weapon effect is experienced except the deposition of chemical agent.

NOTE

A chemical weapon could explode in the immediate vicinity of one ship and be perceived as a standoff release on another ship that is downwind.

470–2.2.4 CHEMICAL AGENT TRAVEL TO AND INTERACTION WITH A SHIP. The manner in which the agent travels away from the release point depends on its physical state. The vapor density influences the movement of agents in gaseous form. For solids and liquids, the size and weight of the particles or droplets are important factors. Environmental factors also influence agent travel and deposition.

470–2.2.4.1 Sources of Chemical Agent Vapor. Some chemical agent vapor is formed in the release process as the liquid or solid agent is expelled under pressure from a bursting munition or a spray device. Vapor will continue to develop from liquid or solid agent after the release based on the volatility of the agent. The higher its volatility (the less persistent it is), the faster evaporation occurs. Primary vapor is that which arrives on a target as a result of the dissemination process, that is, the release of an agent and its travel to the target. Secondary vapor is that which results from evaporation (offgassing) from solid or liquid agent that has been deposited on a target. The source of secondary vapor is desorption and evaporation of agent that has contaminated the ship's surfaces and equipment.

470–2.2.4.1.1 Chemical Agent Vapor Travel. Chemical agent vapor moves with the wind. As the vapor travels downwind, the agent concentration is reduced because of atmospheric diffusion and dilution with air to the point that it no longer poses a threat. However, agents that have a high vapor density, that is, agents that are several times heavier than air, tend to settle near the surface in places where there is not much air circulation. Sometimes the term, **vapor cloud**, is used in describing the shape or location of agent vapor. This is a useful analogy in that the movement of agent vapors is influenced by environmental conditions, just as a cloud is. However, it is important to remember that a cloud of chemical agent vapor is not likely to be visible.

470–2.2.4.1.2 The Influence of Weather Conditions on Agent Vapor Behavior**.** Temperature is the primary influence on the speed with which vapor forms in the evaporation process. The higher the temperature, the more volatile (less persistent) an agent becomes. Wind and turbulence are the main influences on vapor travel. Light winds assist in horizontal dispersion of the vapor, providing better target coverage downwind. On the other hand, high winds cause greater dispersion, reducing the agent concentration and the effectiveness of the attack. Turbulence, which results from unstable atmospheric conditions, diffuses vapor upward. Stable air, in contrast, allows the vapor to remain suspended near the surface for an extended period of time. The most stable

atmospheric condition is a temperature inversion. In this condition, the air temperature is higher above the surface than at the surface. This condition is responsible for foggy conditions and for smog alerts issued in large cities. Chemical agent vapor stays near the surface when a temperature inversion exists, just as fog or smog does. Information on specific combinations of wind speed and turbulence and their suitability for use of chemical agents is provided in NWP 3–20.31D.

470–2.2.4.2 Chemical Agent Aerosol Travel. Aerosols are composed of either liquid droplets or solid particles that are small enough to be suspended in the air. An aerosol is not a gas (vapor) but it behaves like a gas in many ways. The weather conditions described in paragraph 470–2.2.4.1.2 that influence vapor behavior apply to aerosols as well. In fact, the two examples used to illustrate the effects of a temperature inversion, fog and smog, are aerosols. However, there are some additional environmental influences on aerosol behavior.

a. As an aerosol travels downwind, its concentration is reduced, not only because of atmospheric diffusion, but also because some of the droplets or particles settle.

b. Chemical agent vapor may be mixed with the aerosol due to offgassing from the droplets or particles. The higher the air temperature, the greater is the rate of agent evaporation from the aerosol.

c. An additional consideration for aerosols is precipitation. Rain will wash suspended particles or droplets from the air.

470–2.2.4.3 Interaction of Vapor and Aerosol with Ventilation Systems and Interior Spaces. Chemical aerosols and vapors are taken into a ship's ventilation system along with air or migrate into the ship even if the ventilation systems are secured. They are also exhausted by the ventilation system along with stale air. If the ship has reached a clean atmosphere, the interior can be purged by the normal air circulation process. However, vapors that are heavier than air may settle in poorly ventilated areas and present a lingering hazard. Purging procedures are described in paragraph 470–6.3.4.

470–2.2.4.3.1 Condensation. It is possible, but very unlikely, that some condensation of the vapors of persistent chemical agents can occur on cooling coils in a ventilation system, cooling water pipes in a machinery space or some other cool surface. In the unlikely event that this should occur, a temporary percutaneous hazard would result but the amount of liquid agent condensate would not be comparable to the amount of water that typically condenses in these locations. Water droplets can often be seen literally rolling off of cooling coils or unlagged water pipes. Chemical agent condensation on these surfaces, if it occurs at all, would more likely be a thin film than large droplets and it would evaporate rapidly when the contaminated air in the space is replaced with clean air. In summary, it is extremely unlikely that the agent vapor concentration necessary for condensation to occur could be achieved by any chemical weapon.

470–2.2.4.3.2 Deposition. Although an aerosol can pass through the ventilation system like a gas, there will be some deposition, especially of larger particles or droplets, inside the ventilation ducts. Liquid droplets tend to be deposited at bends in the duct and on filters and vanes. Solid particles will tend to collect in the same places dirt would, that is, on filters and in crevices and joints. There will also be some settling in interior spaces served by the ventilation system. However, the fate of the particles or droplets in this environment is thought to be short lived. Liquid droplets and liquid agent sorbed onto solid particles will evaporate. Some of the particles or droplets that came in with the supply airstream will be carried out with the exhaust as well. Solid particles that settle will agglomerate with dust particles. In any case, reaerosolization is not believed to be a problem.

470–2.2.4.4 Liquid Chemical Agent Travel and Deposition. The movement of liquid droplets that are too large to be aerosols is influenced by the wind but they are not truly airborne. The larger particles fall first. The smaller ones are carried downwind. The more wind there is, the farther the droplets are spread downwind. This process is sometimes called toxic rain. This term is misleading because the deposition of liquid agent does not last as long as a rain shower would. It is more like an extremely light drizzle that lasts for only a very short time. The total amount of liquid agent deposited, even in the highest field concentrations, would not even register as a trace on a rain gauge. Rainfall measuring 1/100th of an inch is the lowest measurable concentration of rain. This equates to a surface concentration of 254 g/m^2, many times greater than the liquid concentrations that chemical weapons normally produce on a target.

470–2.2.4.4.1 Interaction of Liquid Chemical Agents with Shipboard Weather Surface Coatings. Persistent liquid chemical agents are sorbed into alkyd paint and non-skid deck coating. **Ad**sorption normally occurs first as a film of agent covers the surface and seeps into cracks and crevices. Then **ab**sorption takes place, as liquid agent slowly diffuses deeper into the material. An agent that has been sorbed into a surface coating slowly desorbs over time and evaporates. The rate of desorption is rapid at first, as agent on or near the surface is released. The rate then slows, as it takes longer for agent that is sorbed deeper in the material to move back to the surface and desorb. This process is illustrated in Figure 470–2–1.

470–2.2.4.4.1.1 The amount of liquid agent that is sorbed by weather surfaces can be reduced by prewetting with the countermeasures washdown system or firehoses. Water fills the microscopic voids in the coatings and prevents liquid agent from being sorbed into the paint or non-skid.

470–2.2.4.4.1.2 If a viscous agent tends to bead on a surface coating rather than spreading, sorption and evaporation are slowed. If the liquid spreads, sorption and evaporation are enhanced.

470–2.2.4.4.1.3 The concentration of agent vapor near the surface or above it is not a valid measure of the amount of sorbed agent in the material. The vapor concentration above a surface could be low but there could be a significant amount of sorbed agent left in the material.

470–2.2.4.4.1.4 The appearance of dryness of a surface that has been exposed to liquid chemical agent does **not** necessarily mean that there is no agent in the material. A hazard to bare skin can still exist. Chemical agent is more easily sorbed into skin than into a weather surface coating. If even a small amount of agent is present in the coating, it can be transferred to the skin by prolonged contact.

470–2.2.4.4.2 The Influence of Weather Conditions on Liquid Agent Behavior. The primary influence on the rate of agent desorption is the temperature of the contaminated surface. The higher the temperature, the faster the agent desorbs and evaporates. In direct sunlight, the temperature of paint or deck coating can be many degrees higher than the ambient temperature. Windspeed across the surface affects the rate of desorption and evaporation but not as much as the surface temperature. Rain, as in the case with prewetting, can reduce the amount of agent that is sorbed into weather surfaces by filling some of the pores, cracks or crevices in the coating and preventing the entry and sorption of chemical agent.

470–2.3 SHIPBOARD POST-ATTACK ENVIRONMENTS – CHEMICAL HAZARDS

470–2.3.1 CHARACTERIZATION OF CHEMICAL HAZARDS. There are two types of chemical hazards based on the physical state of the agent, vapor hazards and liquid hazards. For the purpose of defining shipboard hazardous environments, it is useful to classify chemical hazards by the amount of protective equipment they require. Liquid hazards are assumed to be skin (percutaneous) hazards and to require full body protection. Vapor hazards are further subdivided into eye-respiratory (nonpercutaneous) vapor hazards and skin (percutaneous) vapor hazards. An eye-respiratory vapor hazard requires only eye-respiratory protection. A skin vapor hazard requires full body protection. A vapor hazard is also classified as either a primary effect, that is, a result of the agent dissemination process, or a secondary effect, which results from offgassing from a liquid hazard.

470–2.3.2 HAZARD DESCRIPTIONS. Strictly speaking, an aerosol is not the same thing as a vapor but, for the purpose of defining hazard environments, aerosols are included under the definition of vapor hazards. The definition includes chemical agent vapors, aerosols and combinations of an aerosol and the vapor that offgasses from it. Liquid hazards include thickened and neat (unthickened) agents.

470–2.3.2.1 Eye-Respiratory Vapor Hazard. This type of hazard exists when a chemical agent vapor or aerosol is present in sufficient concentration to be harmful if it enters the body through the respiratory tract or the eyes. The agent may or may not harm the eyes or respiratory tract (nose, throat, lungs) directly. In other words, these body parts may not experience any irritation from exposure to some agents, but if the agents can cause injury to other parts of the body after entering by **either** route, they are considered to be eye-respiratory hazards. A full-face mask is required for protection.

470–2.3.2.2 Skin Vapor Hazard. An agent that can, in vapor or aerosol form, injure the skin or enter the body through the skin is called a skin (percutaneous) vapor hazard. To pose this type of hazard, the initial concentration

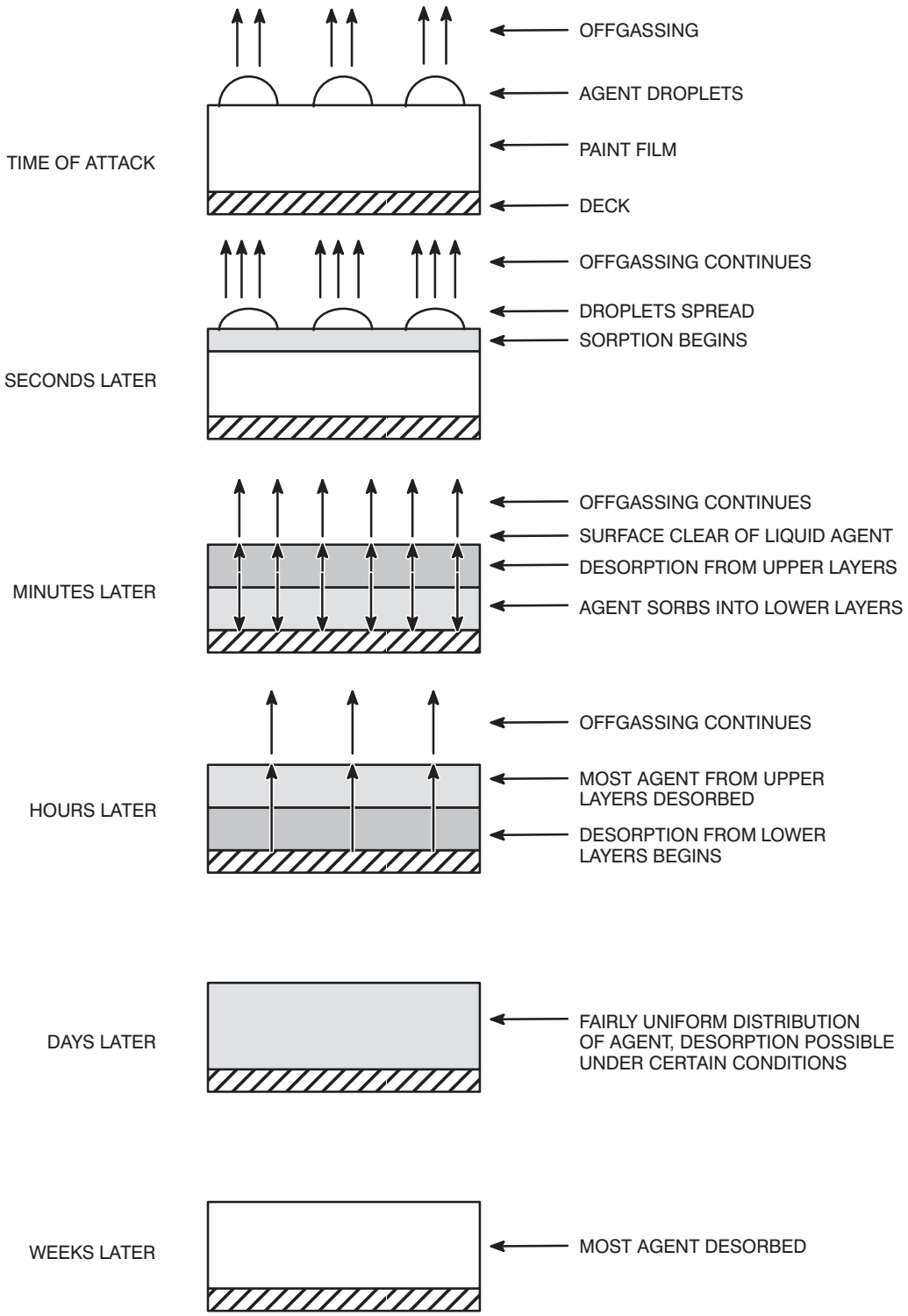

Figure 470–2–1. Interaction Between Liquid Chemical Agent and Surface Coatings

of the vapor or aerosol must be very high, or a lower concentration must be maintained over a long enough time, to reach the percutaneous dose required to affect the human body. Modeling has shown that a skin vapor hazard is more likely to be associated with secondary vapor than with primary vapor. If there is enough vapor present for a long enough time to create a skin vapor hazard, it is certain that an eye–respiratory hazard exists as well. A complete chemical protective ensemble is required for protection against a skin vapor hazard. See paragraph 470–2.2.4.1 for a description of primary and secondary vapor. See paragraph 470–2.1.4.5 for an explanation of percutaneous doses.

470–2.3.2.3 Liquid Hazard. A contact percutaneous (skin) hazard exists when a persistent agent in liquid form has been or is being deposited on a surface, thereby contaminating it. If contamination can be picked up on skin, clothing or equipment and carried from one area to another, this hazard is sometimes called a **transfer hazard.** The full set of protective clothing is required for a liquid hazard. There may be an associated vapor hazard present as well, as the liquid agent evaporates.

470–2.3.2.4 Secondary Vapor Hazard. A secondary vapor or aerosol hazard can develop from a contact hazard. Droplets of agent on the surface may evaporate or agent that has been sorbed into the material may desorb and evaporate. A secondary hazard is a residual effect rather than an initial effect. It is not associated with the initial deposition of the agent but develops from the residue left by the attack. A secondary vapor hazard may be only an eye-respiratory hazard but it could be a skin hazard as well. A secondary hazard is likely to be of less severity than a primary hazard.

470–2.3.2.5 Liquid Hazard Detection and Monitoring. Even if there is no detectable liquid agent on the surface and no vapor is detected above it, there can still be a contact hazard from sorbed agent. Once the agent has been **ab**sorbed, it cannot be detected as a liquid. Offgassing vapor can be detected if its concentration is high enough but the absence of a detectable concentration above a surface does not mean that there is no contact hazard. The vapors could be diffused by airflow across the surface or the rate of desorption could be too slow to produce detectable vapor concentrations and there could still be a contact hazard.

470–2.3.3 CHARACTERIZATION OF CHEMICAL HAZARD AT SHIPBOARD LOCATIONS. There are five unique types of shipboard locations with respect to the hazard environments described in the paragraph 470–2.3.1. The characteristics of each type, primarily with respect to weather exposure and air tightness, determine its susceptibility to each of the hazard environments. The characterizations that follow in paragraphs 470–2.3.3.1 through 470–2.3.3.5 are based on the assumptions that no loss of structural integrity has occurred and that appropriate contamination control practices are observed as described in Section 7. A summary is provided in Table 470–2–5. The effect on these characterizations if contamination control measures are suspended in an operational emergency or if the ship suffers structural damage is discussed in paragraphs 470–2.3.3.6.1 and 470–2.3.3.6.2.

470–2.3.3.1 Weather Decks. Any location that is directly exposed to the weather is susceptible to any of the hazard environments described. A liquid hazard may result from the deposition of liquid agent on the decks. Both eye-respiratory and skin vapor hazards can develop, either as primary or secondary effects. It is also possible that a liquid hazard can exist topside without an attendant vapor hazard. The rate of evaporation may be low enough and the speed of the wind across the deck may be high enough to preclude the existence of a vapor hazard of any type. The decay of the liquid hazard is discussed in Appendix C.

470–2.3.3.2 Partial Weather Exposure. Hangar bays and well decks are normally open to the weather. Such areas, although somewhat protected by overhangs or other enclosures, are still subject to spreading agent vapor or aerosol and to liquid deposition near openings and liquid contamination elsewhere by transfer. Contamination can be transferred by aircraft or boats and by foot traffic. Therefore, these areas must be considered susceptible to all three hazard environments.

470–2.3.3.3 Interior Compartment – Conventional Ventilation. A space inside the skin of the ship that is served by a conventional ventilation system is vulnerable to eye-respiratory vapor hazards (including aerosols) and skin (percutaneous) vapor hazards. An eye-respiratory hazard can develop from primary vapor, that is, from the initial release of agent, or from secondary vapor, which is evaporation from a liquid hazard on the ship's

weather surfaces. A skin vapor hazard is less likely to develop from primary vapor alone. Modeling indicates that the addition of secondary vapor is usually required. Closing Circle William fittings and securing ventilation may reduce but does not eliminate these hazards. There is a very slight possibility that a momentary percutaneous contact hazard could develop from condensation of agent vapor on cooling coils in water fountains and air conditioning units or on unlagged cooling water pipes. This unlikely occurrence is discussed in paragraph 470–2.2.4.3.1.

470–2.3.3.4 Interior Compartment – HEPA Filtration (Limited Protection Zone). The susceptibility of an interior compartment that is protected by a high efficiency particulate arresting (HEPA) filter is the same as that described in the preceding paragraph except that aerosols, whether liquid or solid, are removed. Vapor can pass through a HEPA filter but aerosol droplets or particles cannot. Agents that evaporate from aerosol droplets or from particles entrapped in a HEPA filter can pass through. HEPA protection is provided for the machinery spaces on some new construction ships. Such spaces are vulnerable to eye–respiratory and skin vapor hazards.

470–2.3.3.5 Interior Compartment – Collective Protection System (CPS) Ventilation (Total Protection Zone). A collective protection system (CPS) provides filtered air at an overpressure that ensures that vapors and aerosols cannot enter through the ventilation system or through air leaks in the skin of the ship. A total protection (TP) zone is a toxic free zone. Wearing of protective equipment is not required in TP zones. Section 6 provides a complete description of the CPS.

Table 470–2–5. SHIPBOARD VULNERABILITY OF CHEMICAL HAZARD ENVIRONMENTS
Assumption: No structural damage. Contamination control measures in effect.

Shipboard Location	Eye - Respiratory Vapor Hazard		Percutaneous (Skin) Vapor Hazard		Liquid Contact Hazard
	Primary	**Secondary**	**Primary**	**Secondary**	**Liquid**
Interior Compartment with Conventional Ventilation	Yes	Yes	Unlikely*	Possibly*	Unlikely
Interior Compartment with HEPA Filtration (LP Zone)	Vapor yes, aerosol no	Vapor yes, aerosol no	Vapor unlikely*, aerosol no	Vapor possibly*, aerosol no	No
Interior Compartment with CPS Filtration (TP Zone)	No	No	No	No	No
Weather Decks	Yes	Yes	Unlikely*	Possibly*	Yes, both deposition and transfer
Hangar Bays, Well Decks	Yes	Yes	Unlikely*	Possibly*	Yes, mostly by transfer; deposition at openings
* Based on simulations with a limited number of scenarios.					

470–2.3.3.6 Loss of Structural Integrity or Contamination Control. The characterizations of shipboard hazard environments in paragraph 470–2.3 are based on the assumptions that the ship has not received any structural damage and that appropriate contamination control procedures are used. If either of these assumptions is incorrect, the nature of the chemical hazard at affected locations may change.

470–2.3.3.6.1 The Effect of Lapses in Contamination Control Enforcement. Contamination control measures described in Section 7 include personnel decontamination procedures and isolation of contamination. If, due to an operational emergency, boundaries between clean and contaminated areas are not maintained, a contact hazard can be transferred into areas where there was none before. A survey shall be performed at those locations as soon as possible to determine if a hazard is present and if a different level of personnel protection is required.

470–2.3.3.6.2 The Effect of Structural Damage. Breaches in the ship's structural integrity can allow a hazard to enter an area that it would otherwise be unable to penetrate. For example, an aerosol could bypass a HEPA filter in a compartment that has been opened to the atmosphere, or liquid agent could be deposited near openings. Aerosol could also spread to other areas through damaged ventilation ducting. Another possibility is a penetrating chemical round, which would cause structural damage and introduce a large amount of agent directly into the affected area.

SECTION 3.
BIOLOGICAL WARFARE

470–3.1 THE NATURE OF BIOLOGICAL AGENTS

470–3.1.1 DEFINITION OF BIOLOGICAL AGENTS. Biological agents can be divided into two general classes, pathogens and toxins. A pathogen is a micro-organism that causes disease in humans, animals or plants. A biological toxin is an organic substance that is poisonous to humans or animals. Toxins are not living organisms. When a biological agent is used against a ship, the purpose is to render the crew unable to effectively conduct the ship's mission.

470–3.1.1.1 Pathogens. Pathogens, or germs, are microscopic organisms (microbes) that can cause disease in humans, animals or plants. They cause infection by entering the body, reproducing themselves and overcoming the body's defenses. The effects are not immediately apparent in most cases. This process takes a period of time, known as the incubation period, for the pathogens to establish themselves in the body of the host and to produce disease symptoms. Microbes that cause deterioration in material, such as wood, leather products and clothing, are not discussed in this manual.

470–3.1.1.1.1 There are several requirements that must be met for microbes to reproduce.

a. Water. This forms the greater part of any organism and is necessary for a microorganism to secure food, excrete waste, and prevent it from drying out.

b. Food. Nutrients, such as carbon, nitrogen and vitamins, are needed for the organism to grow.

c. Oxygen. All micro-organisms require oxygen to live. Some microorganisms do not require free oxygen because they can obtain it from other sources than air.

470–3.1.1.1.2 Some microorganisms have the ability to survive adverse conditions by forming spores or cysts, which are capsules that enable them to survive for years without food or water. Spores and cysts are similar to seeds. When the requirements for growth are present, spores and cysts germinate, or sprout, and the microorganism begins to grow and reproduce.

470–3.1.1.1.3 Some pathogenic microorganisms are carried to a susceptible host by other organisms. The carrier is called a vector. Examples of vectors that carry disease are rodents and insects. Some pathogens do not affect the vectors that carry them. The feasibility of using vectors to attack a ship at sea with a biological agent is very low.

470–3.1.1.2 Toxins. Biological toxins are substances produced by microorganisms, plants and animals that are harmful to humans or animals. Some toxins can be synthesized using bioengineering techniques. Toxins exert lethal or incapacitating effects by interfering with cell or tissue functions. Unlike germs, toxins do not require an incubation period because they do not reproduce within the human body. They are considered to be biological agents because they originate in a biological process but they are not organisms and they do not require food, water or oxygen. An example of a toxin is the venom of a poisonous snake bite.

470–3.1.2 USES OF BIOLOGICAL AGENTS. Biological agents can be employed in both strategic and tactical applications in biological warfare. Tactical actions are intended to disrupt an enemy's maneuvers in the short term within a relatively limited geographical area. Strategic uses are those that are intended to diminish an enemy's overall capacity to make war. Strategic actions may exert their effects over a longer time period and cover a larger geographical area. Examples of strategic employment of biological agents are using a pathogen to cause disease in crops that leads to crop failure or use of a toxin (or a toxin-producing microbe) to pollute a water supply. This manual includes some discussion of strategic applications but its primary focus is on tactical employment of biological agents against a ship at sea. In tactical applications, most pathogens could be compared to delayed acting chemical agents. Many toxins are similar to quick acting chemical agents, although the symptoms of some are delayed.

470–3.1.3 CLASSIFICATION OF BIOLOGICAL AGENTS. There are five basic categorizations used to characterize biological agents. Four are very similar to those used to classify chemical agents in paragraphs 470–2.1.1.2 through 470–2.1.1.5. They are military use, duration of hazard, route of entry and onset of effects. These four, with the addition of biological type, can be used as a starting point for discussing the nature of biological agents.

470–3.1.3.1 Biological Type. The basic division in biological agents is between pathogens and toxins. Pathogens that could be used as biological agents include bacteria, rickettsia, viruses, fungi and protozoa. The categorization of toxins is based on the organisms that produce them and the physiological effects the toxins cause in humans. The major groupings by source are mycotoxins (which are from fungi), bacterial toxins, algal toxins, animal venoms and plant toxins. The primary groups based on physiological effects are neurotoxins, cytotoxins, enterotoxins and dermatoxins. Paragraph 470–3.2 discusses these types of potential biological agents.

470–3.1.3.2 Military Use. Biological agents fall into two broad categories based on their tactical use: casualty agents and incapacitating agents. Casualty agents cause either deaths or serious illnesses that make personnel unavailable for combat duty for a long period of time. Other biological agents are incapacitating agents that produce only temporary effects. NAVMED P–5059, **NATO Handbook on the Medical Aspects of NBC Defensive Operations**, defines a lethal agent, which corresponds to a casualty agent, as one that produces a disease that, if untreated, could be expected to produce mortality of 10 percent or greater. NAVMED P–5059 also states that an incapacitating biological agent is one that is expected to be non-lethal to healthy adults.

470–3.1.3.3 Persistence. The persistency of an agent is the measure of the duration of its effectiveness as a biological warfare agent after it has been released into the environment, not the duration of the physiological effects the agent causes in humans. Since toxins do not evaporate, their chemical stability is a key determinant in their persistency. That is, if they decompose rapidly, they are nonpersistent. For a pathogen to be persistent, it must be able to withstand variations in moisture and temperature.

470–3.1.3.4 Route of Entry. An agent that can enter the body through unbroken skin or injure the skin directly is called a **percutaneous** hazard, or a **skin** hazard. An agent that does not injure the skin and can enter the body only through the respiratory tract, ingestion or cuts in the skin is a **nonpercutaneous** hazard. Nonpercutaneous hazards are sometimes called **inhalation** hazards.

470–3.1.3.4.1 Most potential biological agents are not percutaneous hazards. They enter the body through inhalation, ingestion or cuts in the skin. Some potential agents can cause a superficial skin rash but, since this is not a major effect, they are considered to be nonpercutaneous hazards. One exception is T–2 toxin, which causes burning and blistering of the skin like a chemical blister agent. Vector bites provide a way to bypass the protective mask, so diseases that are spread in this way could be considered to be percutaneous hazards. However, such use of vectors against a ship at sea is very unlikely.

470–3.1.3.4.2 The route of entry can affect the way in which the symptoms of a disease occur. A disease that normally enters the body through the digestive tract may, when weaponized, be introduced by inhalation and produce symptoms that differ in sequence and severity from the natural progress of the disease.

470–3.1.3.5 Onset of Effects. An agent is classified as either quick acting or delayed acting based on how quickly a field concentration of the agent can produce the intended effect in unprotected personnel. Most toxins work quickly after exposure to a sufficient concentration, but there are some significant exceptions that are delayed acting. Some toxins can cause incapacitation with a sublethal concentration. On the other hand, the effects of most pathogens are delayed. Most pathogens take even longer than delayed acting chemical agents for symptoms to appear.

470–3.2 TYPES OF POTENTIAL BIOLOGICAL AGENTS

470–3.2.1 TYPES OF PATHOGENS. Many diseases that occur naturally are candidates for use as biological agents. The microbes that cause disease come from several different groups. The following paragraphs describe several types of pathogens. Information on pathogens that have potential as biological warfare agents is available in many general literature and medical sources. However, many of the diseases included are not of concern to

ships. Refer to ONI–TA–004–94, **ONI Threat Assessment: Naval Chemical and Biological Warfare (CBW**), for a listing of threat pathogens. This report was issued in April 1994 and is updated periodically.

470–3.2.1.1 Bacteria. Bacteria are single-celled, microscopic organisms. Of approximately 2000 identified species, about 100 are known to cause disease in humans. Some bacteria are animal parasites that do not harm the animal host but can be deadly when transmitted to humans because there is no natural human immunity against them. Anthrax, tularemia and plague are examples of bacterial diseases that are potential biological warfare agents. Some bacteria, such as staphylococcus, produce toxins that are poisonous to humans.

470–3.2.1.2 Rickettsiae. Rickettsiae are parasites smaller in size than bacteria. They require living tissue for reproduction but can perform some metabolic processes independently. They are transmitted by vectors, such as the ticks that carry Rocky Mountain Spotted Fever. Vector borne diseases are not considered to be good candidates for use against a ship at sea.

470–3.2.1.3 Viruses. Viruses are even smaller than Rickettsiae, and are responsible for 60 percent of all infectious diseases. Viruses enter a living cell and then take over the biological processes of the cell. They exhibit the characteristics of a living organism only when in contact with a host and can reproduce only through the use of a host cell. Human diseases caused by viruses include influenza, smallpox and encephalitis.

470–3.2.1.4 Fungi. This group consists of molds and yeasts. Some are single cell organisms that can be seen only as colonies or with a microscope while others are multicellular organisms that can easily be seen with the naked eye. Most are larger than bacteria. Mushrooms are members of this group. Fungi are a major cause of disease in plants. Although there are some fungi that, as parasites, can cause diseases in humans and other animals, this is much less common than bacterial and viral diseases. Histoplasmosis is an example of a fungal disease that can infect humans. Some fungi can produce toxins, called mycotoxins, that are poisonous to humans.

470–3.2.1.5 Protozoa. Protozoa are single cell organisms that have the ability of locomotion at some stage of the life cycle. They are larger than bacteria and live in moist habitats. Only a few parasitic species are pathogenic. If used as biological warfare agents, protozoa would most likely be used for strategic applications such as contamination of food and water. Examples are amebic dysentary and malaria. They are not considered to be good candidates for use against a ship at sea.

470–3.2.2 NATURAL SOURCES OF POTENTIAL TOXIN AGENTS. Natural toxins have certain characteristics that enhance their potential for use as biological warfare agents. Since they are not living organisms, they do not require moisture or nutrition. Also, they require no incubation period to exert their effects on humans. Several natural toxins are candidates for use in biological warfare. The ideal toxin agent would have the following characteristics.

a. Stability in storage without loss of toxicity.

b. High toxicity (low concentration required to produce toxic effects in humans).

c. Persistent in the environment.

d. Can be economically produced in large quantities.

e. Can be aerosolized.

f. Not detectable by chemical agent sensors.

A single toxin or family of toxins may not possess all of these characteristics, but certain types exhibit enough of them to warrant mentioning as potential agents for tactical use. The following paragraphs describe several types of toxins. They are categorized based on the types of organisms that produce them and their physiological effects. Some types are better candidates for attacking ships at sea than others. NAVFAC P–467, **Potential Military Chemical/Biological Agents and Compounds**, provides details on a number of toxins but not all of them are of

concern to ships. Refer to ONI–TA–004–94, **ONI Threat Assessment: Naval Chemical and Biological Warfare (CBW**), for a listing of threat toxins. This report was issued in April 1994 and is updated periodically.

470–3.2.2.1 Bacterial Toxins. Toxins produced by bacteria are either exotoxins, which are released by living bacteria in the normal elimination process, or endotoxins, which are released only when the producing organism deteriorates. Some of the most potent toxins known are bacterial exotoxins. Exotoxins are more likely to be used in biological warfare than endotoxins.

470–3.2.2.2 Mycotoxins. Mycotoxins are poisonous compounds produced by fungi. Mycotoxicosis is a disease condition resulting from contact with, ingestion of or inhalation of mycotoxins. Several mycotoxins can be produced in militarily significant quantities by a fermentation process or chemical synthesis. It is not necessary to produce mycotoxins of high purity, as the crude mixtures of toxins that result from these processes are often more potent than the sum of the toxicities of the components. Tricothecenes are mycotoxins that could be used as biological agents.

470–3.2.2.3 Algal Toxins. Certain types of fresh and saltwater algae produce toxins. One type of saltwater algae produces one of the most potent neurotoxins known. The toxin is released when algae blooms decompose. At certain times of the year, humans can contract paralytic shellfish poisoning by consuming shellfish such as clams or oysters that feed on this type of algae. It is conceivable that algal toxins could be produced in large quantities.

470–3.2.2.4 Animal Venoms. Certain species of fish, reptiles, amphibians, insects and arachnids produce venoms that are highly toxic. Animal toxins are generally less stable than toxins from plants or fungi.

470–3.2.2.5 Plant Toxins. One of the oldest forms of biological weaponry uses a plant toxin to paralyze or kill. A toxin extract from curare has been used on the tips of poison arrows for centuries. An even more potent plant toxin is ricin, which is extracted from castor beans.

470–3.2.3 PHYSIOLOGICAL EFFECTS OF TOXINS. Potential toxin agents can be categorized by their physiological effects on humans.

470–3.2.3.1 Neurotoxins. Bacterial neurotoxins are exotoxins that attack the central nervous system. Their physiological effect is similar to that of chemical nerve agents. Botulinum and tetanus toxins are examples. Some animal venoms and algal toxins are also neurotoxins but they attack different parts of the nervous system.

470–3.2.3.2 Cytotoxins. These substances kill **all** types of cells in the body by interfering with functions that are common to **all** cells. Ricin, which blocks protein synthesis is an example.

470–3.2.3.3 Enterotoxins. These bacterial exotoxins attack the intestinal tract. Staphylococcal Enterotoxin B (SEB), which is the cause of much food poisoning, is an example.

470–3.2.3.4 Dermatoxins. This category is limited to tricothecene mycotoxins such as T2 toxin. These toxins are the only ones that pose a percutaneous hazard. They can be disseminated in aerosol form like other toxins or as liquid droplets. Their effect on humans is similar to that of chemical blister agents. However, unlike blister agents, they do not evaporate and they do not penetrate clothing or affect material.

470–3.3 PROPERTIES OF BIOLOGICAL AGENTS

470–3.3.1 PROPERTIES OF PATHOGENS. Germs have characteristics that determine their suitability for use as biological agents. The following paragraphs discuss these properties and their significance in biological warfare.

470–3.3.1.1 Viability. Viability is the ability of a pathogen to live in storage and then to reproduce itself after dissemination. A minimum number of germs, or infective dose, is required to produce infection in a human host. In terms of weight, the median lethal doses (LD_{50}) of pathogens are lower than those of chemical agents, but the pathogen must be able to survive in the environment long enough to reach the target population.

470–3.3.1.2 Communicability. This is the ability of a pathogen to be transferred from one individual to another within a target population. The four most common methods of pathogen transmission are:

a. As an aerosol, by coughing, sneezing or simply breathing.

b. Direct contact with an infected host.

c. Contamination of food supplies by food service personnel who have become infected or contaminated.

d. Transmission by vectors. See paragraph 470–3.1.1.1.3

470–3.3.1.3 Incubation Period. This is the period of time required for the pathogens to establish themselves in the body of the host and to produce disease symptoms.

470–3.3.2 PROPERTIES OF TOXINS. The same physical and chemical properties and principles that determine the behavior of chemical agents also apply to toxins. These properties are described in paragraph 470–2.1.3.

470–3.3.2.1 Toxicity. Many toxins are more toxic than chemical agents. That is, the amount (by weight) required to produce injury is lower than for chemical agents.

470–3.3.2.2 Lack of Volatility. The volatility of toxins is so low that they do not evaporate and cause a vapor hazard.

470–3.4 DISSEMINATION AND DECAY OF BIOLOGICAL AGENTS

470–3.4.1 DELIVERY OF TOXINS. Since toxins are similar to chemical agents in many respects, the same types of delivery systems could be used to deliver them on target. These systems are described in paragraph 470–2.2. They would normally be delivered as aerosols of either solid particles or liquid droplets with diameters in the 1–10 micron range or, like persistent liquid chemical agents, as larger droplets. In any case, toxins do not evaporate anywhere near as readily as chemical agents, so aerosols are the only inhalation hazard. There is no associated vapor hazard.

470–3.4.2 DELIVERY OF PATHOGENS. Some pathogens require moisture to stay alive. They die when they dry out. This complicates the delivery of such microbes. However, some pathogens can survive in a dry state, including some viruses and bacterial spores.

470–3.4.2.1 Weapon Systems for Delivery of Pathogens Against Ships at Sea. The most likely form of dissemination of a pathogen against a ship at sea is in an aerosol. Most of the information contained in paragraph 470–2.2.4.2 regarding the aerosol dissemination of chemical agents applies equally to the dissemination of pathogens. However, there is an important difference with respect to pathogen dissemination as an aerosol. If there is any evaporation, it is only water. The pathogen itself does not vaporize. Some pathogens can survive in a dry state, such as bacterial spores and most viruses. Others are killed by the loss of moisture.

470–3.4.2.2 Delivery of Pathogens Against Ships in Port. An aerosol could be used against ships in port to deliver pathogens. Ships in port are subject to receipt of contaminated food and water from local sources. Some pathogens could be delivered by the use of insect vectors. Sabotage or terrorist action are means of delivery that are more likely in port. Since most pathogens do not produce disease symptoms immediately, they can be delivered surreptitiously by a variety of covert means.

470–3.4.3 EFFECTS OF ENVIRONMENTAL CONDITIONS ON BIOLOGICAL AGENTS. Weather is a major factor when biological agents are disseminated by aerosol. Both toxin and pathogen aerosols are affected by the conditions that determine the movement and dissipation of chemical aerosols, discussed in paragraph 470–2.2.4.2. However, pathogens are affected in additional ways.

a. Sunlight. The ultraviolet portion of direct sunlight kills some pathogens. For this reason a BW attack may be more effective on overcast days or during hours of darkness.

b. Humidity. The effect of relative humidity depends on whether the BW agent is disseminated wet or dry. For a wet aerosol, a high relative humidity retards evaporation of the tiny droplets containing the pathogens. A low relative humidity is more favorable for the dissemination of dry agents.

c. Wind. A higher wind speed increases the dispersal of the BW agent, reducing its concentration. A high wind also increases the rate of dehydration of wet agents.

d. Pollutants. Atmospheric pollutants may reduce the viability of many pathogens.

e. Low temperatures may slow the rate of growth of some pathogens.

470–3.5 SHIPBOARD POST-ATTACK ENVIRONMENTS – BIOLOGICAL HAZARD

470–3.5.1 CHARACTERIZATION OF BIOLOGICAL HAZARDS. For the purpose of defining shipboard post-attack hazardous environments, it is useful to classify biological hazards based on the amount of protective equipment required. There are two types of biological hazards based on the form in which they are disseminated, aerosol hazards and liquid hazards. Liquid hazards are assumed to be skin (percutaneous) hazards and to require full body protection. Aerosol hazards are further subdivided into inhalation (nonpercutaneous) aerosol hazards and skin (percutaneous) aersosol hazards. Inhalation aerosol hazards require only eye-respiratory protection. Skin aerosol hazards require full body protection.

470–3.5.1.1 Aerosol Inhalation Hazard. This is the most likely of the hazard environments described here. These agents enter the body only through ingestion, inhalation or abrasions in the skin, so the hazard is nonpercutaneous. Only full face protection and bandages over broken skin are required for protection against this type of threat. Unlike chemical agents, pathogens and toxins do not present a vapor hazard.

470–3.5.1.2 Aerosol Skin Hazard. Few toxins and virtually no pathogens present this type of hazard. Except for the tricothecene mycotoxins, which are similar to blister agents, toxins cannot enter or harm the body through unbroken skin or mucous membrane. Pathogens that produce superficial skin rashes are not included in this category because such a symptom is considered to be a minor effect. Full face and body protection are needed for this hazard.

470–3.5.1.3 Liquid Hazard. This hazard is limited primarily to tricothecene mycotoxins. Full face and body protection are needed for this hazard.

470–3.5.2 CHARACTERIZATION OF BIOLOGICAL HAZARD AT SHIPBOARD LOCATIONS. There are five unique types of shipboard locations with respect to the biological hazard environments described in paragraph 470–3.5.1. The characteristics of each type, primarily with respect to weather exposure and air tightness, determine its susceptibility to each of the hazard environments. The characterizations that follow in paragraphs 470–3.5.2.1 through 470–3.5.2.5 are based on the assumption that no loss of structural integrity has occurred and that appropriate contamination control practices are observed as described in Section 7. A summary is provided in Table 470–3–1. The effect on these characterizations if the ship suffers structural damage or if contamination control measures are suspended is discussed in paragraph 470–3.5.2.6.

470–3.5.2.1 Weather Decks. Any location that is directly exposed to the weather is susceptible to any of the hazard environments described.

470–3.5.2.2 Partial Weather Exposure. Hangar bays and well decks are normally open to the weather. Such areas, although somewhat protected by overhangs or other enclosures, are still subject to aerosols, which can diffuse throughout the area, and to liquid agents, which can be deposited near openings. Contamination on returning boats or aircraft is a possible source, as is foot traffic. Therefore, these areas must be considered susceptible to all the types of hazard environments.

470–3.5.2.3 Interior Compartment – Conventional Ventilation. A space inside the skin of the ship that is served by a conventional ventilation system is subject to aerosol inhalation hazard and aerosol skin hazard environments. Closing Circle William fittings reduces but does not eliminate these hazards.

470–3.5.2.4 Interior Compartment – HEPA Filtration (Limited Protection Zone). A high efficiency particulate air (HEPA) filter removes aerosols and liquid droplets from the airstream. HEPA protection is provided for the machinery spaces on some new construction ships.

470–3.5.2.5 Interior Compartment – Collective Protection System (CPS) Ventilation (Total Protection Zone). A collective protection system (CPS) provides filtered air at an overpressure that ensures that aerosols can enter neither through the ventilation system nor through air leaks in the skin of the ship. A TP zone is a toxic free zone. Section 6 provides a complete description of the CPS.

470–3.5.2.6 Loss of Structural Integrity or Contamination Control. The characterizations of shipboard hazard environments in paragraph 470–3.5.2 are based on the assumptions that the ship has not received any structural damage and that appropriate contamination control procedures are used. If either of these assumptions is incorrect, the nature of the biological hazard at affected locations may change.

470–3.5.2.6.1 The Effect of Lapses in Contamination Control Enforcement. Contamination control measures described in Section 7 include isolation of contamination and personnel decontamination procedures. If, due to an operational emergency, boundaries between clean and contaminated areas are not maintained, a hazard can be transferred into areas where there was none before. A different level of personnel protection may be required in those areas.

470–3.5.2.6.2 The Effect of Structural Damage. Breaches in the ship's structural integrity can allow a hazard to enter an area that it would otherwise be unable to penetrate. For example, an aerosol could bypass a HEPA filter in a compartment that has been opened to the atmosphere. The worst case may be a penetrating round, which explodes inside the ship. Not only is the agent concentration higher, but its rate of dissipation may be slowed by the fact that it is in a partially enclosed area. An aerosol could spread to other areas through damaged ventilation ducting.

Table 470–3–1. SHIPBOARD BIOLOGICAL HAZARD ENVIRONMENTS

Shipboard Location	Aerosol Eye-Respiratory Hazard		Aerosol Skin Hazard	Liquid Hazard
	Toxin	**Pathogen**	**Toxin**	**Toxin**
Interior Compartment, Conventional Ventilation	Yes	Yes	Yes, tricothecene mycotoxin	Unlikely
Interior Compartment, HEPA Filtration	No	No	No	No
Interior Compartment, CPS Ventilation	No	No	No	No
Weather Decks	Yes	Yes	Yes	Yes
Hangar Bays and Well Decks	Yes	Yes	Yes	Yes, near openings
Assumptions: No structural damage. Contamination control measures in effect.				

SECTION 4.
DETECTION AND ASSESSMENT

470–4.1 DETECTION AND IDENTIFICATION OF CHEMICAL AGENTS

470–4.1.1 CHEMICAL AGENT DETECTION AND IDENTIFICATION FUNCTIONAL REQUIREMENTS. An effective and timely system of warning individuals of the existence, nature, and extent of a chemical warfare hazard is required. Proper use of chemical agent detection equipment supports efficient use of protective measures and equipment. A detector is a manual or automatic device designed to detect the presence of chemical warfare agents and to provide an audible or visible indication upon detection. Each chemical agent detector supports one or more of the functional detection capabilities described in the following paragraphs. These descriptions are consistent with the functional definitions in NWP 3–20.31.

470–4.1.1.1 Remote Detection. Remote detection is the capability to detect a chemical agent away from the ship. Ideally, it provides advance warning before the arrival of the agent at the ship to allow time for avoidance maneuvering and the implementation of protective measures. However, the term, **remote**, could imply a remotely placed detector. Therefore, the term, **standoff detector** is used to specify a detector that can detect chemical agents at some distance away from the detector. A **remoted detector** is one that transmits a detection indication to a remote location.

470–4.1.1.2 Point Detection. Point detection provides warning of the arrival of a chemical agent in the immediate vicinity of the detector. This can be accomplished either automatically or with periodic monitoring. An **automatic point detector** includes an audio or visual alarm that calls attention to the fact that chemical agent has arrived at the specified location. **Point detection by periodic monitoring** is accomplished through the use of chemical reagents that change color when exposed to certain chemical agents. Air samplers or strips of detector paper are placed at preselected locations and are then checked by a human operator on a scheduled basis.

470–4.1.1.3 Monitoring. Monitoring is the use of chemical sensors to establish the **presence or absence** of chemical agent in vapor form in the atmosphere or in liquid form on a surface. A **chemical survey** is the systematic documentation of the presence or absence of vapor or liquid contamination at selected locations. Monitoring techniques are used in surveys, to verify that it is safe to remove protective masks and during personnel decontamination. **Hazard Assessment** is the process of estimating the severity and duration of the danger from persistent chemical agents after an attack. This information is consolidated in DC Central to provide an overall assessment of chemical contamination throughout the ship. This information can then be used to make decisions on such matters as decontamination method, priority areas for decontamination and the routing of people around hot spots that are off–limits due to a high level of contamination.

470–4.1.2 CHEMICAL AGENT DETECTION AND IDENTIFICATION SYSTEM. Although a single type of detector may be used for more than one of the functions described in the preceding paragraph, several different types are needed to provide the information necessary for operational decision making and self defense. Because of the wide variety of agents and the fact that agents can be encountered in any physical state, it is not practical with current technology to rely on a single detection device. There is no single chemical sensor that detects and identifies all agents in every physical form. Several detectors are needed to comprise a chemical agent detection and identification system.

470–4.2 DETECTION OF GASEOUS CHEMICAL AGENTS

470–4.2.1 DETECTION EQUIPMENT FOR CHEMICAL AGENT VAPOR. Detectors for chemical agent vapors are available for standoff detection, point detection and monitoring.

470–4.2.2 CHEMICAL WARFARE DIRECTIONAL DETECTOR. The current standoff detection equipment, the Chemical Warfare Directional Detector (CWDD), AN/KAS–1, is a manually operated passive sensor that can detect nerve agent vapor at distances of several nautical miles from the ship. The CWDD can detect the infrared

signature of GA, GD, GB, GF and VX but cannot discriminate among these agents. The CWDD is a passive detector, so it cannot determine the range to the vapor cloud.

470–4.2.2.1 CWDD Principles of Operation. The CWDD is a passive infrared imaging sensor. This means that the operator sees a picture from infrared energy, not normal light. Three infrared filters are used, one at a time, to screen out all frequencies except the bands in which nerve agents emit infrared energy. Two filters (filters number two and three) admit the frequencies that are characteristic of nerve agents. The other filter (number one) admits energy at a frequency between the other two. If the operator can see the cloud when filters two and three are in place, but not with filter number one, the cloud is nerve agent. With the filters removed, the CWDD can be used to track the movements of a confirmed nerve agent cloud or in its secondary role as a night vision device.

470–4.2.2.2 CWDD Description. The CWDD is semi–portable. The mount and power supply are permanently installed. The detector is two–man portable. The operator can choose either a narrow or wide field of view. The CWDD has a focus knob and controls for brightness and contrast similar to those on a television set. It has a filter wheel switch that allows the operator to rotate through three infrared filters and the open (no filter) position. A mounted CWDD is shown in Figure 470–4–1.

470–4.2.2.3 AN/KAS–1A Modification. The AN/KAS–1A modification to the CWDD incorporates a relative bearing readout into the video display seen by the operator. It also provides the capability for adding monitors at other locations on the ship for remote video display.

470–4.2.2.4 CWDD Operator Functions. The CWDD takes two to six minutes to stabilize after it is turned on. The operator scans by manually pivoting the sensor unit in its swivel mount to interrogate rapidly forming clouds. Such clouds can result from an artillery burst, a missile explosion or from a spray device. On each interrogation, the operator rotates through the three filters and the open (no filter) position, pausing two to four seconds between filter switches. The process is repeated if necessary. Once a cloud is confirmed as a nerve agent, the operator can shift to the open position to track the cloud. A skilled operator can achieve detection beyond ten nautical miles and track the cloud for several minutes. See the technical manual for details, SW073–AA–MMO–010, **Technical Manual – Description, Operation and Maintenance Instructions for Chemical Warfare Directional Detector AN/KAS–1.**

470–4.2.3 CHEMICAL AGENT POINT DETECTOR SYSTEM (CAPDS). The Chemical Agent Point Detector System (CAPDS) MK 21 MOD 1 is an installed, automatic vapor sensor that provides point detection of several nerve agents. The CAPDS provides a means of continuously sampling outside air and it automatically indicates the presence of an agent by audible and visual alarms. It detects GA, GB, GD, GF and VX nerve agent vapor.

470–4.2.3.1 CAPDS Principles of Operation. The CAPDS is an ionization–type point detector. Its sensor units contain ionization cells in which ambient air, heated to 60°C (140°F), is ionized by passing it over a radioactive source. Ions from air containing nerve agents produce an electrical current with characteristics that activate the alarm.

470–4.2.3.2 CAPDS Description. Each system has two sensor units, one located on the port side and one on the starboard side of the ship. Each sensor unit consists of a Through Bulkhead Unit (TBU) and an Ionization Detector Unit (IDU). A fan in the TBU brings in outside air to the IDU. Each IDU is connected to a Remote Control Unit (RCU) in Damage Control Central. There is an RCU for the port side and one for the starboard side of each system. The port and starboard RCU's are connected to a single Remote Status Unit (RSU) on the bridge. Each RCU has a horn that sounds, a red light that flashes and a meter that deflects to the right when chemical agent is detected. It also has a TBU no flow light that indicates a fan malfunction. The RSU has red flashing port and starboard alarm lights and a single horn. It is connected to the ship's chemical alarm. The horns can be turned off at the RSU and RCU's. The chemical alarm can be secured at the RSU. The alarm lights cannot be secured at any location. A functional diagram of the CAPDS is shown in Figure 470–4–2.

470–4.2.3.3 CAPDS Operator Functions. The CAPDS requires little operator involvement once it has been activated and stabilized. It takes three to four minutes to stabilize after it has been turned on. Then it samples

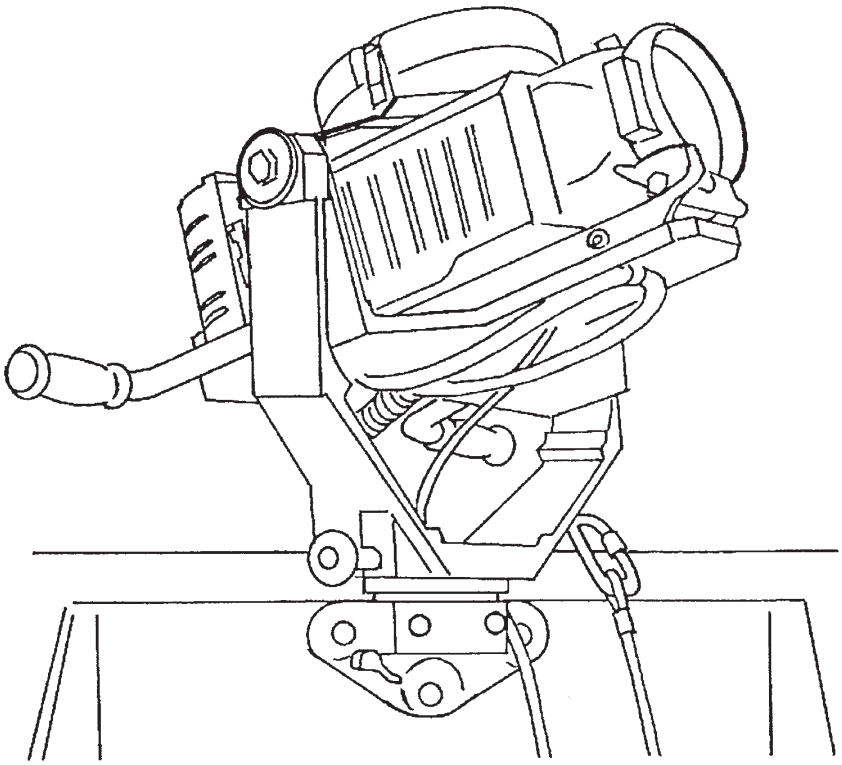

Figure 470–4–1. Chemical Warfare Directional Detector (CWDD), AN/KAS–1

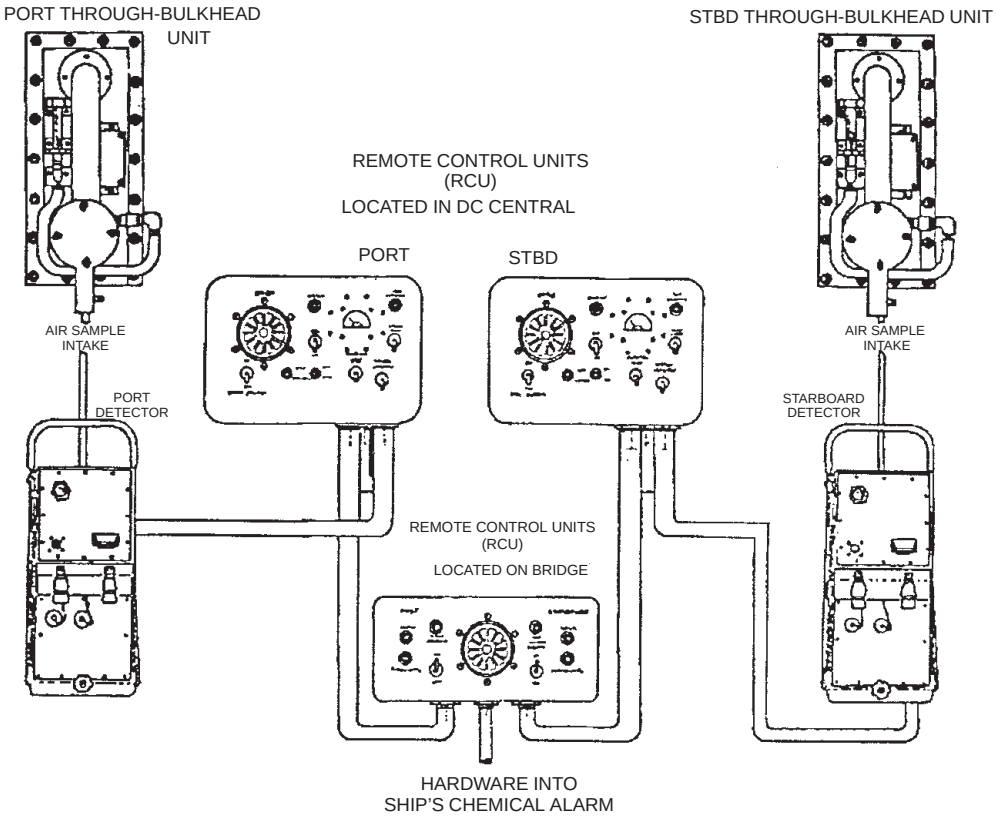

Figure 470–4–2. Chemical Agent Point Detector System (CAPDS)

outside air, alarms, clears and secures the alarm without operator intervention. It performs these functions in seconds under normal conditions. During the turn–on procedure, the operator sets the audible alarm switches and conducts a built–in–test (BIT). The audible alarms can be secured if desired. See the technical manual for details, SW073–AB–MMO–010, **Operation and Maintenance Instructions with Illustrated Parts Breakdown for Chemical Agent Point Detector System, Mark 21 Mod 1.**

470–4.2.3.4 Operation of the CAPDS During Casualty Conditions. The CAPDS can be operated during certain casualties. When primary power to the IDU is lost, power is supplied by an internal battery. Response times are slower on battery power. If power is lost to the RCU, the system will continue to operate but the RCU alarm switches and the TBU no flow light do not work. If the TBU fan malfunctions and the TBU no flow light turns on, the unit will still operate, but more slowly than normal.

470–4.2.4 IMPROVED (CHEMICAL AGENT) POINT DETECTOR SYSTEM (IPDS). The Improved (Chemical Agent) Point Detector System (IPDS) is an installed, automatic vapor sensor that provides real time point detection of several nerve and blister agents. The IPDS continuously samples outside air and automatically indicates the presence of an agent by audible and visual alarms. It detects G–series nerve agents (Including GA, GB, GD and GF), V–series nerve agents like VX and H–series blister agent, for example, HD.

470–4.2.4.1 IPDS Principles of Operation. The IPDS is an Ion Mobility Spectroscopy (IMS) type detector. In its detector units, air samples are mixed with reagents and ionized. The ions are then accelerated through an electric field in which they separate based on the charge and mass of each ion. The time it takes each ion to travel through the electric field is measured. This is its IMS signature. Each substance that can be ionized produces a unique IMS signature that can be compared to the signatures of known substances, which are maintained in an electronic data base. If a signature matches the signature of a G or V–series nerve or an H–series blister agent, the IPDS goes into an alarm condition.

470–4.2.4.2 IPDS Description. Each system has a port and a starboard External Air Sampling Unit (EASU) and a port and a starboard Detector Unit (DU). Each EASU continuously collects air from outside the ship and sends some of it to the associated DU for analysis. The DU divides the air sample between two IMS cells of opposite polarity, one for detecting nerve agent, the other for detecting blister agent. The cells operate simultaneously. If either detects the IMS signature of an agent, the DU sends an alarm to the Control Display Unit (CDU), which is located in either DC Central (DCC) or the Central Control Station (CCS), and to the Remote Display Unit (RDU) on the Bridge. Alpha–numeric readouts on the RDU and CDU identify the series of the agent. The RDU and CDU also display system status messages. Both have audible alarms. The CDU contains the control switches for the system. Automatic activation of the ship's chemical alarm by the IPDS can be selected at the RDU. A functional diagram of the IPDS is shown in Figure 470–4–3.

WARNING

During operations in a chemical warfare environment, **NEVER** turn off both port and starboard DU's at the same time to perform maintenance. This will result in a total loss of detection capability for a prolonged period.

470–4.2.4.3 Operator Functions on the CDU. The IPDS is designed for continuous operation for up to 30 days. It requires little operator involvement once it has been activated and stabilized. When activated, it takes about 30 minutes for the DU's to reach their operating temperature of 180°F. The DU's then automatically switch into the standby mode to allow the system to stabilize at the operating temperature and to clear any contaminants that may have accumulated in the air passages. After four hours, the operator at the CDU switches the system to the running–sampling mode. When the system goes into an alarm condition, the operator can suppress the local alarm horn with a toggle switch at the CDU. The horn is silenced only for that specific detection event. It is not necessary to reset the switch. If a different agent is detected or, after the DU clears, if it detects the same agent again, the horn sounds. The DU's periodically go into a self–monitoring routine. Also, the operator can manually initiate a Built–in–Test (BIT) while the system is in operation. In both procedures, the operator cycles through any error messages on the system's operational status by using the local alarm switch.

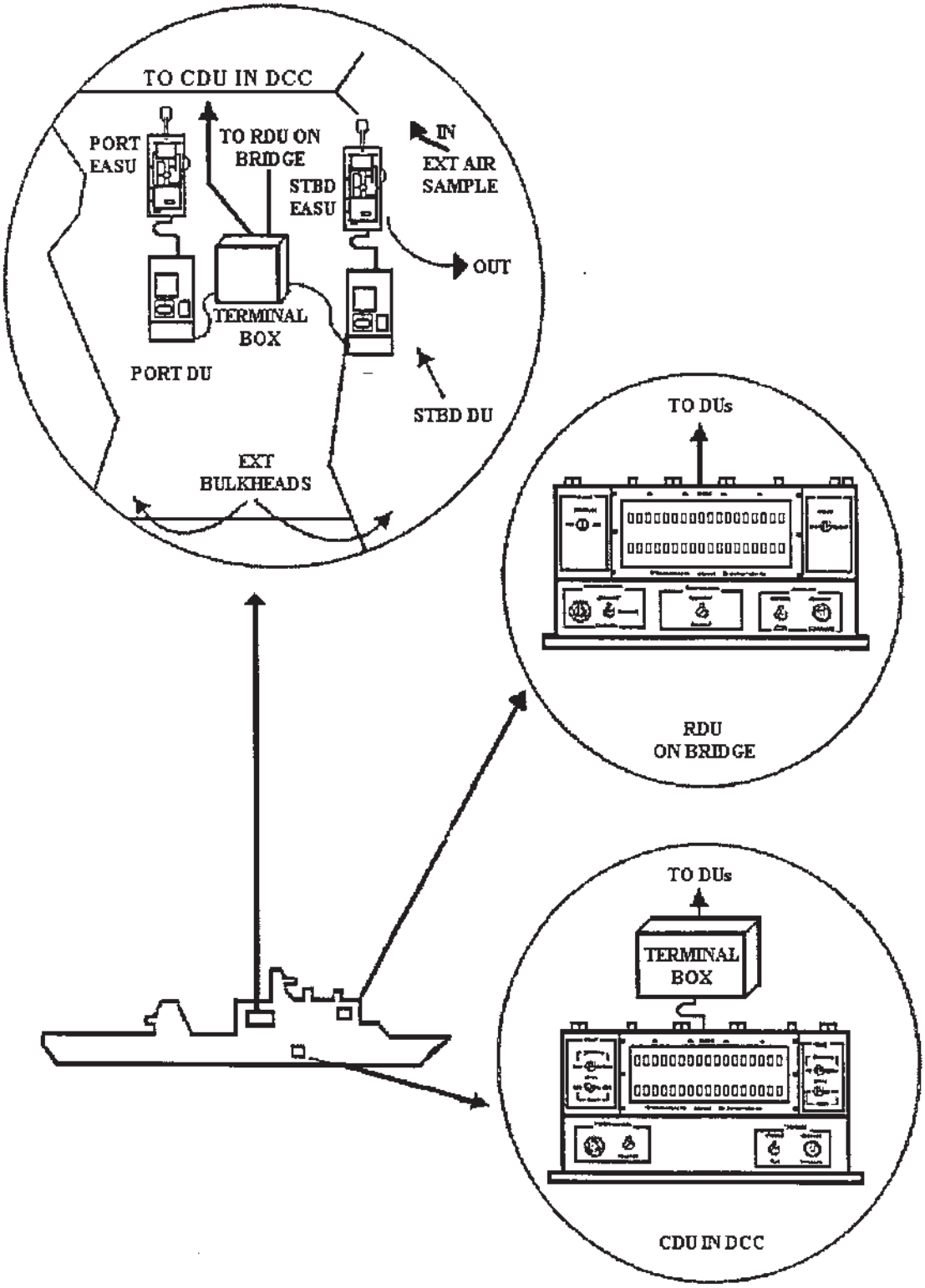

Figure 470–4–3. Improved (Chemical Agent) Point Detector System (IPDS)

470–4.2.4.4 Operator Functions on the RDU. The operator chooses the mode of operation. The choices are:

a. Alphanumeric display of system status messages and alarms

b. Alphanumeric display plus local audible alarm

c. Alphanumeric display, local audible alarm and automatic activation of the ship's 1MC chemical alarm

470–4.2.4.5 Clearing of the IMS Cells. The alphanumeric display shows the agent series message and the audible alarm sounds continuously (unless the operator silences it) until the DU can no longer detect chemical agent vapor. If the concentration of the current air sample is high enough to saturate the IMS cell, the DU automatically starts the purge cycle and causes the alphanumeric displays at the CDU and RDU to indicate that one or both DU's are purging. The purge cycle can last from one minute to seven days, depending on the level of contamination in the cell. A cell that is saturated cannot generate alarms. The system automatically returns to the running–sampling mode when the cell senses that purging is complete.

WARNING

Each of the two IMS cells in each detector unit (DU) contains a source of alpha radiation. These cells are potentially dangerous if opened or broken. They shall be removed from the DU and serviced only at a depot level repair facility. If exposed to this radiation hazard, see the ship's medical officer and report the incident to the ship's safety officer.

CAUTION

Paint vapor may cause false G–series agent alarms. The port or starboard system shall be switched to Standby or Off when paint vapors are present in the vicinity of the EASU for that system.

470–4.2.4.6 Operation and Maintenance of the IPDS. The procedures in S9437–A8–MMM–010, **Draft Technical Manual for Improved (Chemical Agent) Point Detection System (IPDS), System Description, Operation and Maintenance** shall be followed. This is essential to avoid damage to the system, to ensure system reliability and for the safety of operator and maintenance personnel.

470–4.2.5 M256A1 DETECTOR KITS. The M256A1 detector kit provides a man–portable capability for detecting operational concentrations of nerve, blister and blood agents. The kit contains 12 individually packaged sampler–detectors, a set of instruction cards for the sampler detectors and a booklet of M8 Chemical Agent Detector Paper. These components are packed in a small plastic case that has a shoulder strap and a waist strap. The sampler–detectors are vapor detectors. In a single exposure, they detect nerve (V and G series), blister (H–series, L, CX) and blood agents (AC and CK). L and, sometimes, CX, can be individually identified. Only the physiological effects series of the other agents can be determined (nerve, blister or blood agents). The M8 paper is used to detect liquid nerve and blister agents. Instructions are printed on the inside rear cover of the booklet. The use of M8 paper is discussed in paragraph 470–4.3.2, under liquid agent detectors. The sampler–detectors are discussed in the following subordinate paragraphs. The M256A1 Kit and a sampler–detector are shown in Figure 470–4–4.

WARNING

Personnel who are color–blind shall not analyze M256A1 sampler–detector test results. The tests are based on color comparisons. An incorrect reading of test results could lead to premature removal of protective clothing and cause casualties.

WARNING

When conducting tests at night, do not perform the tests under red light. A red light can conceal a positive response when testing for blood or blister agents and can make the interpretation of other results difficult. If using a flashlight, the red lens should be removed.

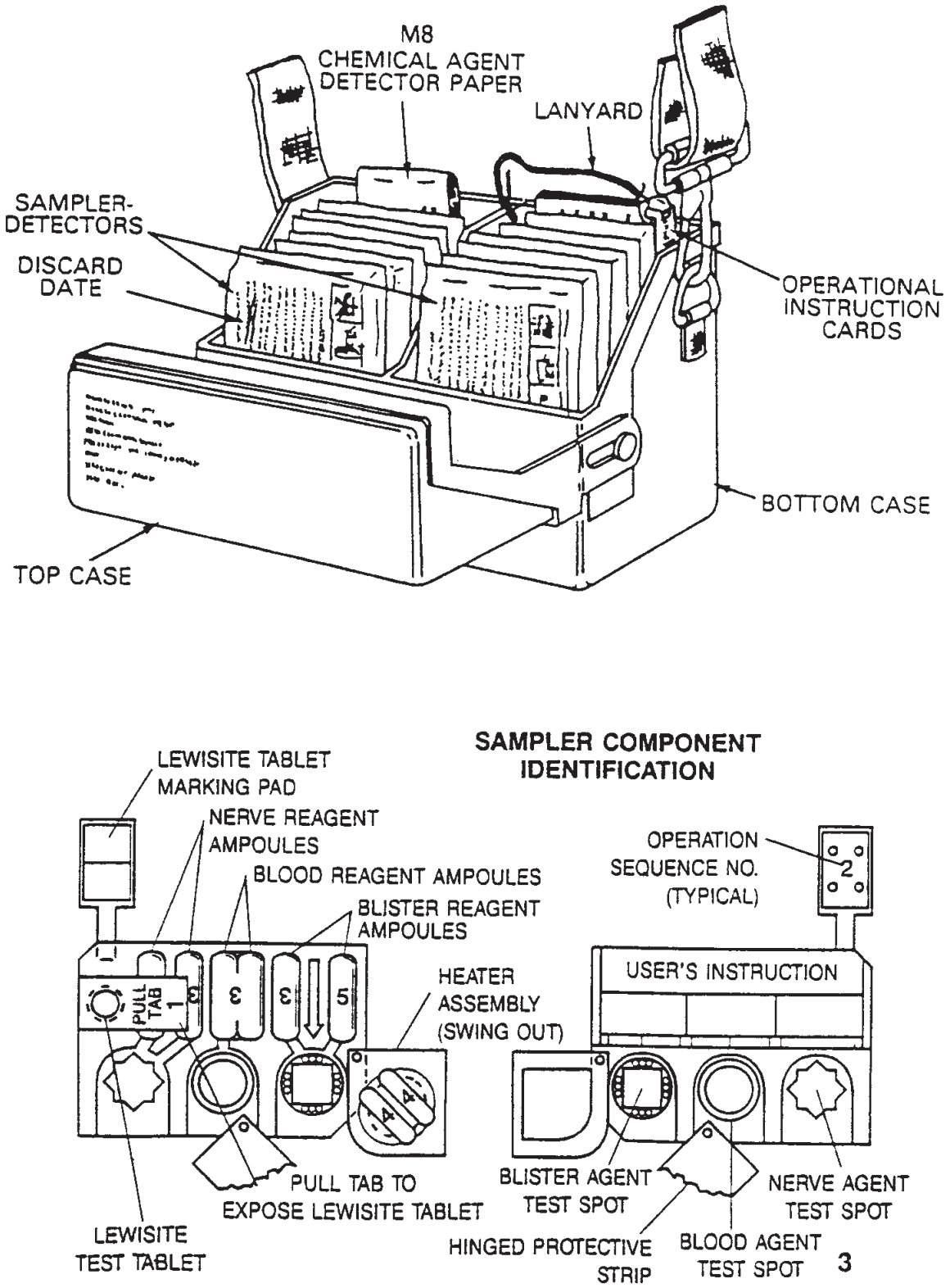

Figure 470–4–4. M256A1 Detector Kit and Sampler–Detector as Shown on Instruction Card

WARNING

A number of substances or conditions can produce unreliable or false positive test results with the M256A1 sampler–detector. See paragraph 470–4.2.5.1 for a complete list.

470–4.2.5.1 M256A1 Sampler–Detector Description and Principles of Operation. Individual sampler–detectors are expendable. Each can be used only once. Each sampler–detector contains an agent test spot for nerve agents, one for blister agents and one for blood agents. Each test spot is linked to a pair of crushable ampule containing chemical reagents. When the test spots are wetted by their associated reagents, they respond with specific color changes upon contact with the vapors of specific chemical agents. Each sampler–detector contains a heater. The blister agent test spots must be heated in accordance with the instruction cards. The test for Lewisite involves removing a protective tab to expose a test tablet, scratching it and observing color changes. The instruction cards that come in the kit provide details. The following conditions can produce unreliable or false positive test results.

a. Use of an outdated sampler–detector.

b. Touching sampler–detector test spots with fingers or gloves.

c. Exposure of Sampler–detector to heavy rain or other forms of water.

d. Exposure of the test spots to direct sunlight while conducting tests.

e. Exposure of the sampler–detector to smoke.

f. Exposure of sampler–detector in areas where calcium hypochlorite has been used. The Lewisite and blister agent tests are particularly susceptible.

470–4.2.5.2 Functional use of the M256A1 Sampler–Detector. M256A1 sampler–detectors are used in monitoring. They can be used after an attack to determine if gaseous chemical agents are present by following the instructions that come with the M256A1 Kit. They can be used to determine when it is safe to unmask following a chemical attack by following the instructions in the kit and in paragraph 470–4.4.7.1. They can be used to test for offgassing from a potentially contaminated surface by following the instructions that come with the kit as modified by paragraph 470–4.2.5.4.

WARNING

As a minimum, the CBR protective mask and glove set shall be worn while performing tests with the M256A1 sampler–detector.

WARNING

Two heater pads are stowed under the heater. They are used to protect the gloves and fingers from being cut while crushing the reagent ampules.

WARNING

Tests with the M256A1 sampler–detector are conducted facing into the wind. The operator shall avoid being burned by the hot vapors from the heater ampules by holding the sampler detector down and to one side. This precaution shall be observed while crushing a heater ampule and continued until the ampule ceases venting hot gasses. Do **not** use the heater pads to crush heater ampules.

470–4.2.5.3 M256A1 Sampler–Detector Operator Functions. Depending on operator proficiency, 17 to 20 minutes are required to complete all tests. Times for various test functions are estimated by the operator, who is wearing protective clothing and unable to use a watch. Tests are performed facing into the wind (or, inside the

ship, facing the airstream from ventilation). This prevents contaminating the sampler–detector with vapor from the operator's clothing. The operator shall read the instruction cards and the safety precautions on the protective bag before using the sampler–detector. The operator shall be familiar with the functional uses described in paragraph 470–4.2.5.2. The operator shall be familiar with the following first aid procedures.

a. Avoid getting kit chemicals on the skin or into cuts and scratches. Remove kit chemicals from the skin by wiping or blotting. Then flush the affected area with a large amount of water. Contact with these chemicals may not cause an immediate reaction, but the exposed area must be washed even if the individual feels no discomfort. Anyone who has a reaction or irritation after contact with the kit shall seek medical help.

b. If kit chemicals accidentally get into the eyes, flush the eyes with clean water for 15 minutes and then seek medical help.

c. If kit chemicals accidentally get into the mouth or are swallowed, rinse the mouth with water and spit it out. Do not attempt to induce vomiting. Seek medical help.

WARNING

Do not use a bucket to contain offgassing vapors from a potentially contaminated surface if the bucket may have been used to mix decontaminating or cleaning solutions. The sampler–detector may yield false positive results.

470–4.2.5.4 Detection of Vapor Offgassing from a Potentially Contaminated Surface with an M256A1 Kit. The preferred method is to place an empty can or box over the surface to concentrate offgassing vapors. The sampler–detector is exposed underneath the can or box.

a. The tests for Lewisite, H–series blister agent and nerve agent are run with a single sampler–detector. All procedures on the laminated card in the M256A1 Kit apply except numbers 4 and 5. The instructions for safe/danger observations shall be facing upwards under the can or box.

b. If a blood agent test is desired, it is run with a second sampler–detector. Procedures numbers 1, 4 and 5 on the laminated card apply. Then, keeping the arrow pointing down, swing out the protective strip and place the sampler–detector under the box or can for 10 minutes. Then check the results immediately.

c. Alternatively, all tests can be run simultaneously with a single sampler–detector by placing it uncovered on the contaminated surface with the instructions facing upwards.

NOTE

In the nerve and blister agent test, the two ampules marked number 3 in the center are not broken. In the blood agent test, only these two ampules are broken.

470–4.2.5.5 M256A1 Sampler–Detector Operation Under Special Conditions. Tests performed under certain climate conditions require special procedures:

a. Between 32° and 50°F, wait at least six minutes after testing to compare colors.

b. Between –25° and 32°F, put the unopened packet in a warm place for five minutes; ensure the ampules are thawed before use. Follow steps 1–9 in the kit's instructions; leave the ampules outside for 10 minutes; bring the ampules to a warm area to thaw; then perform the remaining steps.

c. For other extreme conditions (desert conditions or tropic conditions or in rain or snow) see the kit's instructions.

470–4.2.5.6 M256A1 Shelf Life and Disposal. This detector kit has a shelf life of five years. The discard date is stamped on the protective bag in which each sampler–detector is enclosed. Expired kits shall not be used for training. Each sampler–detector contains 2.6 mg of mercuric cyanide and is considered hazardous waste. Used, damaged or expired sampler–detectors shall be turned in to the hazardous waste coordinator.

WARNING

The M256A1 Training Kit is used only for training. It does not detect any chemical agent.

470–4.2.5.7 M256A1 Training Kit. This training kit contains all the items in an M256A1 kit except M8 paper and it simulates the operation of the M256A1 sampler–detectors. The components are identified as training materials by the blue color on the sampler–detectors. The operating procedures for the training kit are the same as those for the M256A1 kit. The expiration date is printed on each case and each sampler–detector packet. Kits that expire unused shall be disposed of as hazardous material. Sampler–detectors expended for training can be discarded as normal trash.

470–4.2.6 USE OF DRAEGER DETECTION TUBES FOR DETECTING PHOSGENE IN A CHEMICAL ATTACK. Draeger tubes, provided for gas free engineering, are the only phosgene (CG) detection devices available aboard ship. In the event of a suspected chemical attack, use CG Draeger tubes to survey for CG.

470–4.2.6.1 Draeger Tube Principles of Operation. Draeger detection tubes are used to detect chemicals in gaseous form. The Draeger tube test equipment consists of a hand–held bellows pump and detector tubes designed to detect specific gases of interest in gas free engineering. Each tube is filled with an inert carrier material, silica gel, that is mixed with a reagent. When air is drawn through the tube, the presence of certain vapors or aerosols causes the reagent to change color. Individual colors correspond to specific vapors or aerosols. In the case of phosgene, a response time of one to two minutes is required to produce a result. A color change to bluish–green indicates the presence of phosgene.

470–4.2.6.2 Performance of Test for Phosgene. The test is performed as follows:

1. Use bellows pump in accordance with standard operating procedures.

2. Break both ends of the CG Draeger Tube and insert one end into the pump.

3. Draw air through the tube by compressing and releasing the pump. The CG tube requires five strokes.

4. The response time of the CG tube is one to two minutes. A color change to bluish green indicates the presence of phosgene.

470–4.2.6.3 Shelf Life of Phosgene Draeger Tubes. The glass tubes are hermetically sealed, packaged in boxes of ten each, and have a two year shelf life.

470–4.2.7 CHEMICAL AGENT MONITOR. The Chemical Agent Monitor (CAM) is a hand held vapor sensor that detects nerve agents and blister agents. It has not been issued to the fleet but there is a stock available for use in emergency situations. If these items were ever issued to selected ships on this basis, instruction in operation and maintenance of the CAM would be provided.

470–4.3 DETECTION OF LIQUID CHEMICAL AGENTS

470–4.3.1 DETECTION EQUIPMENT FOR LIQUID CHEMICAL AGENTS. A liquid detector is designed to detect chemical agent liquid droplets. As explained in paragraph 470–2.2.4.4.1.3, vapor detectors cannot be depended upon to indicate the presence of liquid agent. Current liquid agent detection equipment can be used for point detection and monitoring. It has no automatic feature, however, so point detection is accomplished with periodic monitoring.

470–4.3.2 M8 DETECTOR PAPER. M8 detector paper is a chemically treated, dye–impregnated paper, perforated for easy removal. Liquid nerve (G and V) and blister agents (H and L) can be identified by color changes on the paper. It is contained in booklets in the M256A1 kit. The booklets consist of either 25 sheets (25 responses) or 25 split sheets (50 separate responses). It is used for detection and monitoring. M8 paper can be ordered separately from the M256A1 kit under NSN 6665–00–050–8529.

WARNING

Personnel who are color–blind shall not analyze M8 paper test results. The tests are based on color comparisons. An incorrect reading of test results could lead to premature removal of protective clothing and cause casualties.

WARNING

M8 paper will give a false positive response when exposed to certain substances including training simulants (oil of wintergreen) and some decontaminants.

WARNING

When conducting agent tests at night with M8 paper, do not perform the tests under red light. A red light may conceal a positive response when testing for blister agents and can make the interpretation of other results difficult. If using a flashlight, the red lens should be removed.

470–4.3.2.1 M8 Detector Paper Operation. Instructions are printed on the back cover of each booklet of M8 paper. When M8 paper contacts liquid chemical agents, the color changes are matched to a color comparison chart, which is printed on the inside front cover of the booklet, for identification. Liquid droplets as small as a fine mist will produce a color change which is detectable to the naked eye. The response time for M8 paper is 20 seconds. A booklet of M8 detector paper is shown in Figure 470–4–5. Both the inside and the outside of the front cover are shown. The colors in the color comparison chart on the inside front cover are labeled in Figure 470–4–5.

NOTE

The color comparison chart on the inside of the front cover of booklets of M8 paper shows H series agents as the only blister agents detected. However, M8 paper detects Lewisite (L), as well, with a bright red or scarlet color.

470–4.3.2.2 Functional Use of M8 Paper. M8 paper can be used for either point detection or monitoring. The paper can be mounted on shipboard surfaces as described in paragraph 470–4.4.2.1 to monitor for the arrival of agent droplets. Although it can detect an attack almost instantaneously, it must be monitored visually. During post–attack surveys, discussed in paragraphs 470–4.4.4 through 470–4.4.6, blot – do not rub – the paper on the surfaces being monitored.

470–4.3.3 M9 DETECTOR PAPER. The M9 chemical agent detector paper is a chemically treated, dye–impregnated paper. The presence of liquid nerve (G&V) and blister (H&L) agents can be detected by color changes to some shade of red on the M9 paper. The identity of the agent cannot be determined with M9 paper. It is issued as a single roll and is contained in a cardboard dispenser with a serrated metal edge for cutting. A moisture–proof, resealable bag is provided for storing the dispenser after it is removed from its original package. M9 paper has adhesive on the reverse side for attachment to surfaces and clothing. The adhesive side is covered in the dispenser by a strip of olive drab (OD) paper. M9 paper will not stick to dirty, oily or greasy surfaces. A roll of M9 paper in its cardboard dispenser and a plastic storage bag are shown in Figure 470–4–6.

WARNING

Personnel who are color–blind shall not analyze M9 paper test results. The tests are based on color comparisons. An incorrect reading of test results could lead to premature removal of protective clothing and cause casualties.

WARNING

When conducting agent tests at night with M9 paper, do not perform the tests under red light. A red light may conceal a positive response and can make the interpretation of other results difficult. If using a flashlight, the red lens should be removed.

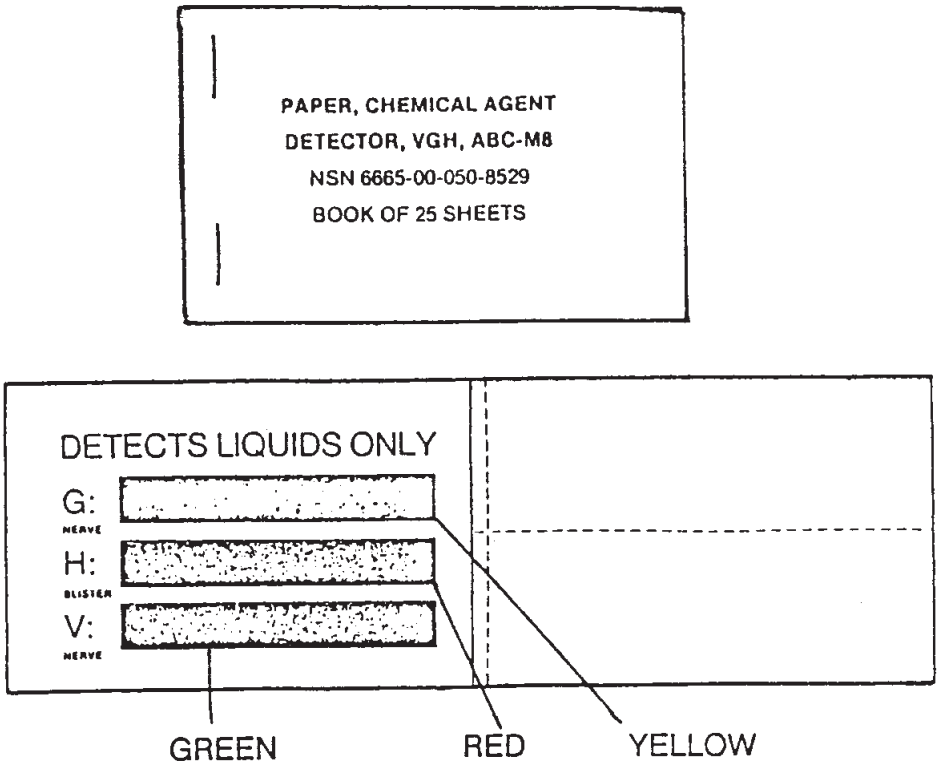

Figure 470–4–5. M8 Detector Paper

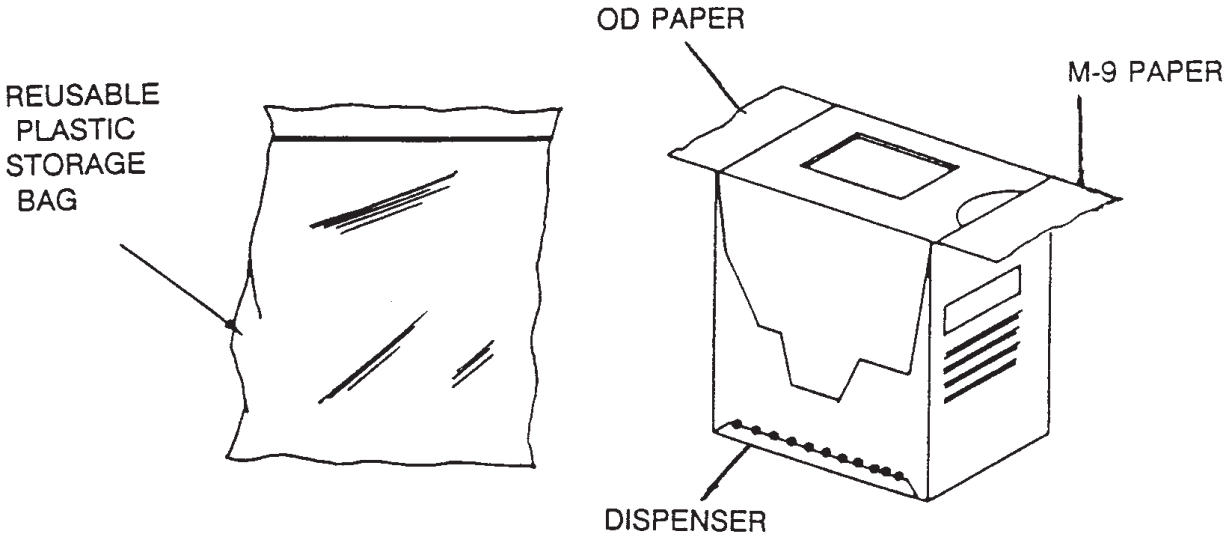

Figure 470–4–6. M9 Detector Paper and Storage Bag

WARNING

A number of substances or conditions can produce unreliable or false positive test results with M9 Paper. See paragraph 470–4.3.3.1.

470–4.3.3.1 M9 Detector Paper Operation. Prepare the dispenser for operation by removing the cutter edge protector and leading the M9 and OD paper out of opposite sides of the dispenser. M9 paper has no agent specificity. Some shade of red (red, red–brown, red–purple or pink) appears for all detectable agents. If blue, yellow, green, gray or black spots develop on M9 paper, they are **not** caused by liquid chemical agents. M9 paper is sensitive to even smaller droplets than M8 paper and will respond in ten seconds or less except at extreme temperatures. False positive readings can be caused by the following substances or conditions.

a. Temperature above 125°F (52°C)

b. Scuffs

c. Brake fluid

d. Aircraft surface cleaning compound

e. Gasoline

f. Grease

g. Petroleum based hydraulic fluid

h. Insect repellent and spray

i. Lubricating oil

j. Antifreeze

k. Sand colored camouflage stick

l. FS smoke screen

470–4.3.3.2 M9 Paper Operation Under Special Conditions. The detector paper will work in rain, snow and sleet but should be changed when soaked because the paper will not immediately respond to agents in that condition. Response time increases at temperatures below freezing. It may take several minutes for color to appear.

470–4.3.3.3 Functional Use of M9 Paper. M9 paper can be used for either point detection or monitoring. For point detection, the paper can be placed on equipment or shipboard surfaces or attached to chemical protective clothing. The paper can be mounted on shipboard surfaces as described in paragraph 470–4.4.2.1. When attaching the detector paper to protective clothing, use the procedure described in paragraph 470–4.4.2.2. When monitoring for liquid agent contamination of a surface during post–attack surveys, take a piece of detector paper and blot the deck or surface around the suspected area. Do not scrape or rub detector paper across rough surfaces as scuff marks will cause false readings. Post–attack surveys are discussed in paragraphs 470–4.4.3 through 470–4.4.5.

470–4.3.3.4 Shelf Life and Operational Life of M9 Paper. The discard date is stamped on the shipping bag and the dispenser box. The discard date is three years after the date of manufacture, which is also stamped on the dispenser. Do not open the shipping bag until ready for use because, once the paper is removed from the shipping bag, the operational life of the paper is one year in most parts of the world. It is two years in frigid zones. Replace unused M9 paper in the plastic storage bag to ensure maximum operational life. Mark the package with the date it was opened. In any case, M9 paper cannot be used after the discard date stamped on the dispenser.

470–4.3.4 TRAINING IN USE OF DETECTOR PAPER. The Hand–Held Chemical Agent Simulant Disperser can be used with approved training simulant to practice using M8 and M9 paper for detection of liquid agent. See Appendix E.

470–4.4 MONITORING OF CHEMICAL AGENT CONTAMINATION

470–4.4.1 CHEMICAL SURVEY PROCEDURES. In general, the purpose of chemical surveys is to detect, locate and identify chemical agents in either liquid or vapor form. A format for recording chemical survey results is provided in Figure 470–4–7.

470–4.4.1.1 Information Required from Chemical Surveys. The most important information required from chemical surveys is determining:

a. Was the ship exposed to blood agent? If it was, the filter canisters on all protective masks shall be changed in accordance with paragraph 470–5.2.6.2.

b. Is offgassing from persistent agent on the ship's weather surfaces occurring? If so, a higher protective posture may be required inside the ship.

c. Has the ship departed a vapor hazard area and reached an uncontaminated atmosphere? If there is no secondary vapor hazard, purging can begin at this point in accordance with paragraph 470–6.2.2.

d. Have decontamination and purging efforts been successful?

The correlation of survey results, ventilation status and tactical information may be useful in making these determinations.

470–4.4.1.2 Chemical Surveys and Their Purposes. There are five types of surveys.

a. Periodic monitoring procedures are used for detecting the arrival of chemical agents in liquid form.

b. On–station monitoring is performed in selected spaces during the attack to determine if there is a vapor hazard inside the ship.

c. A rapid internal survey is conducted after a suspected chemical attack to determine if there is a vapor hazard in selected vital spaces or other manned spaces inside the ship.

d. A rapid external survey is conducted as soon as possible after an attack with liquid agent to determine if there is liquid contamination at vital topside stations or, after an attack with agent in vapor form only, to confirm that the ship has reached a clean atmosphere.

e. Subsequent surveys of all or part of the ship shall be conducted as time permits to find and mark the boundaries of contaminated areas.

470–4.4.2 PERIODIC MONITORING FOR THE ARRIVAL OF LIQUID AGENT. In the absence of an automatic liquid agent point detection device, it is necessary to use detector paper to provide an indication of the arrival of liquid agent. In effect, detector paper is used as a point detector. However, since it does not provide an alarm, a monitoring procedure is necessary. Monitoring locations shall be selected in advance in accordance with paragraph 470–4.4.2.1 and printed on Chemical Survey Forms. An example is provided in Figure 470–4–8. The form is maintained in Damage Control Central. Watchstanders or battle station personnel shall report any changes in the appearance of the detector paper.

470–4.4.2.1 Placement of Detector Paper. M8 and M9 paper are attached to the outside of windows, fixed port lights, and airports in **manned** spaces. This allows observation of the paper from inside the ship. It can also be attached to flat surfaces that can be viewed from inside. The paper is mounted in pairs, a piece of M8 for specificity and a piece of M9 for sensitivity. Pairs shall be mounted to cover as many aspects as possible at each location. The paper shall be securely fastened to the surface to prevent it from becoming dislodged. Each edge

CHEMICAL SURVEY FORM

DATE: MONITORING TEAM:

SHIP: TYPE SURVEY:

EXIT: ROUTE NUMBER:

DECON: SHEET NUMBER:

Station Number	Survey Location (Area/Object)	Detector	Test Type	Time	Results
1					
2					
3					
4					
5					
6					
7					
8					
9					
10					

INSTRUCTIONS:

1. Routes/Stations are established in advance. Topside routes require exit and reentry (via decon station) door numbers.
2. Record agent identity and concentration (if known) in RESULTS column. Liquid contamination density estimate is based on Chemical Hazard Assessment Guide, Appendix C.
3. Form is maintained in DC Central for On–Station Monitoring, Rapid Internal Survey and Periodic Liquid Agent Monitoring. Results are reported by phone or messenger. Form is carried by monitors on external surveys and subsequent surveys.
4. Be aware of conditions that can cause false positive indications.
5. Detector paper that is posted for liquid agent monitoring shall be securely taped on all edges. It shall be replaced when soaked with water or exposed to substances that cause false positive indications.

Figure 470–4–7. Chemical Survey Form

CHEMICAL SURVEY FORM

DATE:		MONITORING TEAM:	ON-STATION WATCH
SHIP:		TYPE SURVEY:	LIQUID MONITORING
EXIT:	N/A	ROUTE NUMBER:	N/A
DECON:	N/A	SHEET NUMBER:	1 OF 1

Station Number	Survey Location (Area/Object)	Detector	Test Type	Time	Results
1	Port Bridge Wing windows, rails	M8/M9 Paper	Liquid (posted)		
2	Stbd Bridge Wing windows, rails	M8/M9 Paper	Liquid (posted)		
3	Bridge windows at centerline	M8/M9 Paper	Liquid (posted)		
4	Signal Shelter windows	M8/M9 Paper	Liquid (posted)		
5	Missile Launcher Control Booth windows	M8/M9 Paper	Liquid (posted)		
6	Wardroom port lights	M8/M9 Paper	Liquid (posted)		
7	Wardroom Pantry port lights	M8/M9 Paper	Liquid (posted)		

INSTRUCTIONS:

1. Routes/Stations are established in advance. Topside routes require exit and reentry (via decon station) door numbers.
2. Record agent identity and concentration (if known) in RESULTS column. Liquid contamination density estimate is based on Chemical Hazard Assessment Guide, Appendix C.
3. Form is maintained in DC Central for On–Station Monitoring, Rapid Internal Survey and Periodic Liquid Agent Monitoring. Results are reported by phone or messenger. Form is carried by monitors on external surveys and subsequent surveys.
4. Be aware of conditions that can cause false positive indications.
5. Detector paper that is posted for liquid agent monitoring shall be securely taped on all edges. It shall be replaced when soaked with water or exposed to substances that cause false positive indications.

Figure 470–4–8. Sample Liquid Agent Monitoring Form

shall be taped over its entire length to the surface. The detector paper shall be replaced when it becomes soaked or torn or after exposure to materials that can cause a false positive indication. It is important to correlate the appearance of a color change on the paper with exposure to substances that could produce a false positive indication. Posting and replacement of detector paper shall be coordinated with the operation of the countermeasures washdown system.

470–4.4.2.2 Topside Personnel. If it is necessary for any personnel to remain topside when a chemical attack is considered probable or imminent, M9 paper shall be attached around the sleeves of selected individuals' protective garments. The paper band shall be loose enough that it will not tear with movement but tight enough that it will not slip off. The adhesive side shall be against the sleeve and the band shall be secured adhesive side to adhesive side with a flap, or overlap, of approximately one inch. It is advisable to select individuals who will not be engaged in work that could tear or dislodge the paper band.

470–4.4.2.3 Chemical Hazard Assessment. In addition to detecting, localizing and identifying liquid chemical agents, it is important to estimate the duration of the resulting hazard. Due to the mission–degrading effects of protective clothing, a restrictive protective posture should be relaxed as soon as it is safe to do so. Appendix C, Chemical Hazard Assessment Guide, provides a method by which the temperature and wind speed are used with the graphs in Appendix C to predict hazard duration for neat (unthickened) agents.

470–4.4.3 ON–STATION MONITORING. On station monitoring shall commence as soon as possible after an attack begins. It can be conducted while the ship is at general quarters because it is not necessary to break Material Condition ZEBRA. Testing shall be performed using the sampler–detectors from the M256A1 Kit and phosgene Draeger tubes from gas–free engineering equipment. Monitoring locations shall be selected in advance in accordance with paragraph 470–4.4.3.1 and printed on chemical survey forms. An example is provided in Figure 470–4–9. The form is maintained in Damage Control Central. On–station personnel report the results of their tests to DCC. The purpose of on–station monitoring is not to test the atmosphere in every compartment in the ship but, from tests at selected locations:

a. To rapidly determine if an internal vapor hazard exists.

b. To determine if the ship was attacked with blood agent so the filter canisters on protective masks can be replaced after the attack.

470–4.4.3.1 Monitoring Locations. On–station monitoring shall be conducted in compartments that are **not** within CPS Total Protection (TP) zones. Locations shall include some spaces on conventional ventilation systems that are on recirculation systems and some that are not. Engineering machinery spaces are recommended because they would not be in TP zones or conventional recirculation systems. Air conditioned enclosed operating stations (EOS) that are on conventional recirculation systems could be included. Repair lockers are also recommended as monitoring locations unless they are in CPS TP zones.

470–4.4.3.2 Continuous Testing. Testing shall be coordinated by Damage Control Central and continue throughout the attack. Since the M256A1 takes up to 20 minutes to obtain results, different stations shall stagger the start time of their tests as directed by DCC. Testing may be performed while the countermeasures washdown system is operating.

470–4.4.4 RAPID INTERNAL SURVEY. A rapid internal survey is initiated based on information from any source that a chemical attack may have occurred including the following:

a. Automatic alarms

b. Color changes in detector paper

c. Reports from other ships or attacks with weapons that are known to be associated with chemical agents.

d. Remote detections

e. Predictions of the ship's exposure to downwind hazard areas based on ATP 45, VLSTRACK or the NBC Warning and Reporting System

CHEMICAL SURVEY FORM

DATE:		MONITORING TEAM:	N/A
SHIP:		TYPE SURVEY:	ON-STATION MONITOR
EXIT:	N/A	ROUTE NUMBER:	N/A
DECON:	N/A	SHEET NUMBER:	

Station Number	Survey Location (Area/Object)	Detector	Test Type	Time	Results
1	Repair 2	M256A1 and CG Draeger Tube	Vapor		
2	Repair 3	M256A1 and CG Draeger Tube	Vapor		
3	Repair 5	M256A1 and CG Draeger Tube	Vapor		
4	Main Machinery Room 1	M256A1 and CG Draeger Tube	Vapor		
5	MMR 1 EOS	M256A1 and CG Draeger Tube	Vapor		
6	Main Machinery Room 2	M256A1 and CG Draeger Tube	Vapor		
7	MMR 2 EOS	M256A1 and CG Draeger Tube	Vapor		
8	Auxiliary Machinery Room	M256A1 and CG Draeger Tube	Vapor		
9	Electronic Equipment Room 01–60–3E	M256A1 and CG Draeger Tube	Vapor		
10					

INSTRUCTIONS:

1. Routes/Stations are established in advance. Topside routes require exit and reentry (via decon station) door numbers.
2. Record agent identity and concentration (if known) in RESULTS column. Liquid contamination density estimate is based on Chemical Hazard Assessment Guide, Appendix C.
3. Form is maintained in DC Central for On–Station Monitoring, Rapid Internal Survey and Periodic Liquid Agent Monitoring. Results are reported by phone or messenger. Form is carried by monitors on external surveys and subsequent surveys.
4. Be aware of conditions that can cause false positive indications.
5. Detector paper that is posted for liquid agent monitoring shall be securely taped on all edges. It shall be replaced when soaked with water or exposed to substances that cause false positive indications.

Figure 470–4–9. On–Station Monitoring Form

The purpose of a rapid internal survey is to determine if a vapor hazard exists in vital stations or other manned spaces. Testing shall be performed using the sampler–detectors from the M256A1 kit and phosgene Draeger tubes from gas–free engineering equipment.

470–4.4.4.1 Survey Locations. During a rapid internal survey, testing shall be conducted at selected vital stations or other manned spaces. Locations shall be selected to include different areas of the ship on different ventilation systems. Compartments in CPS TP zones shall not be tested unless there is a reason to suspect that intrusion of chemical agent may have occurred. If there are locations anywhere on the ship where water intrusion occurs during rain or drizzle, M8 and M9 paper shall be posted there in advance and checked during the rapid internal survey. Vapor tests with the M256A1 shall be performed at these locations also. Monitoring locations shall be selected in advance in accordance with the foregoing criteria and printed on Chemical Survey Forms. An example is provided in Figure 470–4–10. The form is maintained in Damage Control Central.

470–4.4.4.2 Simultaneous Testing. Testing with the M256A1 kit can take up to 20 minutes for some agents. Therefore, tests shall be performed simultaneously at all locations rather than sequentially, if possible. A monitor shall be dispatched to each survey location. Each monitor shall report the results to DC Central as each test is completed.

470–4.4.4.3 Sequential Testing. If the number of qualified personnel available for monitoring is insufficient to cover all survey locations simultaneously, a sequential testing procedure is necessary. In sequential testing, a monitor initiates the test in the first space, then leaves the sampler–detector there and proceeds on to other assigned survey locations. The monitor rotates through all assigned survey locations to perform subsequent operator functions with the sampler–detectors and to interpret the results.

470–4.4.4.4 Timing of Rapid Internal Surveys. There is more than one reason to conduct a rapid internal survey. The general purpose is to determine if chemical agent vapor is present inside the ship but there are several different occasions that this information is needed and different prerequisites apply. They are summarized in Table 470–4–1. A rapid internal survey may be conducted while the countermeasures washdown system is being operated for contamination avoidance (prewetting and immediate post–attack washdown) as described in paragraph 470–7.3.3 and Appendix C. If the washdown system is being used in a decontamination role (as opposed to a contamination avoidance role), its effectiveness cannot be evaluated until one ventilation purge cycle after the washdown system has been secured. See paragraph 470–6.2.2 for a discussion of ventilation purge procedures.

Table 470–4–1. TIMING OF RAPID INTERNAL SURVEYS

Objective	Initiation
Evaluate effectiveness of securing ventilation (CPS LP zones and conventional systems) to minimize intake of agent vapor.	ASAP after ventilation is secured.
Evaluate effectiveness of purging.	After completion of purge cycle.
Determine if ship decon efforts were successful.	At completion of one purge cycle after completion of decon.
Determine if secondary vapor may be offgassing from weather surfaces.	One purge cycle after ship has exited hazard area predicted by VLSTRACK, ATP 45 or the NBC Warning and Reporting System (NBCWRS).

470–4.4.5 RAPID EXTERNAL SURVEY. A rapid external survey is a series of tests for chemical agents at selected topside locations. There are three situations in which a rapid external survey is conducted.

a. If the periodic monitoring procedures described in paragraph 470–4.4.2 detect the arrival of a liquid (persistent) agent, a rapid external survey is conducted as soon as possible after the attack ceases. If the countermeasures washdown system is in operation, this survey commences as soon as it is secured.

CHEMICAL SURVEY FORM

DATE:		MONITORING TEAM:	REPAIR 2
SHIP:		TYPE SURVEY:	RAPID INTERNAL
EXIT:	N/A	ROUTE NUMBER:	1
DECON:	N/A	SHEET NUMBER:	1 OF 1

Station Number	Survey Location (Area/Object)	Detector	Test Type	Time	Results
1	CIC 03–45–0C Frame 50 port side	M256A1 and CG Draeger Tube	Vapor		
2	Bridge Frame 40 centerline	M256A1 and CG Draeger Tube	Vapor		
3	Battle Dressing Station 1–50–4L, water intrusion	M256A1 and CG Draeger Tube	Vapor		
4	Battle Dressing Station 1–50–4L, water intrusion	M8/M9 Paper	Liquid (posted)		
5	Chart House 03–50–0C Frame 50 centerline	M256A1 and CG Draeger Tube	Vapor		

INSTRUCTIONS:

1. Routes/Stations are established in advance. Topside routes require exit and reentry (via decon station) door numbers.
2. Record agent identity and concentration (if known) in RESULTS column. Liquid contamination density estimate is based on Chemical Hazard Assessment Guide, Appendix C.
3. Form is maintained in DC Central for On–Station Monitoring, Rapid Internal Survey and Periodic Liquid Agent Monitoring. Results are reported by phone or messenger. Form is carried by monitors on external surveys and subsequent surveys.
4. Be aware of conditions that can cause false positive indications.
5. Detector paper that is posted for liquid agent monitoring shall be securely taped on all edges. It shall be replaced when soaked with water or exposed to substances that cause false positive indications.

Figure 470–4–10. Sample Rapid Internal Survey Form

b. If any vapor point detector indicates that an attack with a **nonpersistent** agent has occurred, no external survey is conducted until downwind hazard predictions (based on ATP 45 calculations, VLSTRACK projections or the NBC Warning and Reporting System) indicate that the ship has exited the vapor hazard area. At that time, a rapid external survey is conducted to confirm that the ship has reached a clean atmosphere.

c. If any vapor detector indicates that an attack with a **persistent** agent has occurred but there is no evidence that there is liquid contamination on the ship, an external vapor survey shall be conducted when downwind hazard predictions (based on ATP 45 calculations, VLSTRACK projections or the NBC Warning and Reporting System) indicate that the ship has exited the vapor hazard area.

470–4.4.5.1 Rapid External Survey for Liquid Contamination. After a persistent chemical agent is released from a munition, droplets of liquid agent will fall for seconds or, at most, minutes. Liquid chemical surveys are conducted topside as soon as possible after deposition ceases because neat (unthickened) liquid agent can soak into paint, non–skid coatings and permeable material very quickly. If the countermeasures washdown system was operating at the time of the attack or was activated immediately thereafter, the survey shall be conducted immediately after the washdown system is secured. The topside locations to be surveyed are vital stations and accesses to decontamination stations and contamination control areas. Monitoring locations shall be selected in advance and printed on Chemical Survey Forms. An example is provided in Figure 470–4–11. These locations shall be prioritized immediately prior to the survey based on the likelihood that they will be used on the ship's current mission. The monitors carry the form with them and complete their assigned routes as quickly as possible. Both M8 and M9 paper shall be used at each location. Detector paper shall be blotted, not rubbed, on the surfaces selected for testing. Several surfaces of different textures shall be tested at each location, including any fitting that an operator might have to use, such as seats and control handles. The survey shall concentrate on forward facing surfaces. Contaminated areas are not marked during this survey.

470–4.4.5.2 Rapid External Survey for Chemical Agent Vapor. The M256A1 kit and phosgene Draeger tubes are used for topside vapor surveys when liquid agent contamination on weather surfaces is either confirmed or suspected or when the ship has exited a vapor hazard area. Testing for nonpersistent vapors shall be conducted in topside areas exposed to the wind as well as sheltered areas. If vapor from a persistent agent is detected during this survey, additional surveys may be necessary to determine whether it is offgassing from liquid agent on topside surfaces or the ship is still in vapor hazard area. The results of this survey shall be coordinated with the results of rapid external surveys for liquid contamination and with rapid internal surveys conducted after the ship has exited the predicted vapor hazard area.

470–4.4.6 SUBSEQUENT SURVEYS. There are several reasons to conduct subsequent surveys.

a. The locations covered in the rapid internal and external surveys are chosen for their importance to the ship's operational capability. However, NWP 3–20.31 requires that the entire ship be surveyed.

b. Surveys to test for vapors offgassing from a suspected contaminated surface shall be conducted to confirm hazard assessments and to evaluate the effectiveness of decontamination efforts.

c. After a ventilation purge cycle, a rapid internal survey is conducted in accordance with Table 470–4–1.

470–4.4.7 REDUCING MOPP LEVEL. When the risk of chemical contamination is minimal, verified by the use of chemical agent detectors, and personnel are required to operate at moderate to heavy work rates, the Commanding Officer (CO) may authorize them to reduce their protection by lowering the MOPP level. Special procedures are used for unmasking after a nerve agent attack because they are quick acting and are so highly toxic. That is, they produce incapacitation or death at lower vapor concentrations than other agents. Also, small concentrations of nerve agent produce easily recognizable symptoms, described in paragraph 470–2.1.4.6.1, relatively quickly.

WARNING

Direct sun may give a false nerve agent indication by causing the pupils to contract. If possible, this procedure should be conducted in a shady place away from bright sunlight. If it is necessary to conduct the test in sunlight, the medical representative can cover the eyes of the test subjects and look for pupil response.

CHEMICAL SURVEY FORM

DATE:		MONITORING TEAM:	REPAIR 3
SHIP:		TYPE SURVEY:	RAPID EXTERNAL
EXIT:	1–115–3	ROUTE NUMBER:	1
DECON:	1–120–2	SHEET NUMBER:	1 OF 1

Station Number	Survey Location (Area/Object)	Detector	Test Type	Time	Results
1	Refueling Station, Main Deck, Frame 105 port side	M8/M9 Paper	Liquid (blot)		
2	Towed Array winch controls, Fantail	M8/M9 Paper	Liquid (blot)		
3	Helo Deck, starboard side	M8/M9 Paper	Liquid (blot)		
4	Helo Deck, centerline	M8/M9 Paper	Liquid (blot)		
5	Helo Deck, port side	M8/M9 Paper	Liquid (blot)		
6	Motor Whaleboat davits	M8/M9 Paper	Liquid (blot)		
7	Aft Lookout Station 02 Level, Frame 90	M8/M9 Paper	Liquid (blot)		

INSTRUCTIONS:

1. Routes/Stations are established in advance. Topside routes require exit and reentry (via decon station) door numbers.
2. Record agent identity and concentration (if known) in RESULTS column. Liquid contamination density estimate is based on Chemical Hazard Assessment Guide, Appendix C.
3. Form is maintained in DC Central for On–station Monitoring, Rapid Internal Survey and Periodic Liquid Agent Monitoring. Results are reported by phone or messenger. Form is carried by monitors on external surveys and subsequent surveys.
4. Be aware of conditions that can cause false positive indications.
5. Detector paper that is posted for liquid agent monitoring shall be securely taped on all edges. It shall be replaced when soaked with water or exposed to substances that cause false positive indications.

Figure 470–4–11. Sample Rapid External Survey Form (Liquid Agent)

470–4.4.7.1 Unmasking Procedures with an M256A1 Kit. If a M256A1 detector kit is available, test twice for agent presence before initiating the unmasking procedures. After two tests with the detector kit have been performed with negative results, the senior medical person selects one or two individuals to start the unmasking procedures. The CO must approve the selections of the medical representative. The selected individual(s) unmask for five minutes, reseal, and clear their masks. Watch them for ten minutes to see if any symptoms of nerve agent poisoning appear. The most likely symptoms are loss of pupil response to light (pin point pupils) or severe reddening of the eyes. If no symptoms appear, it is safe to give the all clear signal and unmask. If the result is positive, do not order unmasking. Continue the mission and retest after approximately one hour using different people as test subjects. Continue to observe the individual(s) who unmasked first for delayed symptoms. Always have first aid treatment immediately available in case it is needed.

470–4.4.7.2 Unmasking Procedure When No M256A1 Kit is Available. If a M256A1 detector kit is not available, the unmasking procedure takes approximately 35 minutes. Find a shady area. When a reasonable amount of time has passed after the attack based on a hazard assessment conducted in accordance with Appendix C, select one or two individuals to take a deep breath and break the mask seal, keeping their eyes wide open for about ten seconds. They then clear and reseal their masks. Observe them for ten minutes. If no symptoms develop in ten minutes, they again break the seal and take two or three deep breaths, then clear and reseal their masks. Again observe them for ten minutes. If there are still no symptoms, they unmask for five minutes and then remask. Again, observe for ten minutes. If they show no symptoms, the all clear signal can be given. If the result is positive, do not order unmasking. Continue the mission and retest after approximately one hour using different people as test subjects. Continue to observe the individual(s) who unmasked first for delayed symptoms. Always have first aid treatment immediately available in case it is needed.

NOTE

There are no shipboard detectors for solid chemical agents. Vapor detectors may provide an indication of their presence from offgassing but cannot be relied upon with all agents under all possible conditions. The Interim Biological Agent Detection System (IBADS) can detect an increase in the particle count in the respirable size range, as described in paragraph 470–4.5.2.1. If there is no accompanying evidence of a biological attack, the presence of a dry chemical agent could explain such an increase.

470–4.5 DETECTION AND IDENTIFICATION OF BIOLOGICAL AGENTS

470–4.5.1 CONFIRMATION THAT A BIOLOGICAL ATTACK HAS OCCURRED. Establishing definitively that a biological attack has occurred is difficult. It is normal for a small percentage of the crew to be ill due to the effects of naturally occurring pathogens. Occasionally, there are outbreaks of illness that affect a larger percentage. This could also be due to natural causes but the following developments could indicate that a biological warfare agent is responsible.

a. The number of casualties reaches epidemic proportions within hours to three days, most within a 24 hour period.

b. The infection rate or death rate is higher than normally expected for the disease.

c. An outbreak of a disease occurs that is not normally encountered in the area of the world in which the ship is operating.

d. Personnel working in a protected environment do not contract the disease.

e. Outbreak of multiple diseases occurs.

To confirm that a biological attack was responsible, samples collected by a biological detection system, environmental samples collected by repair parties or biomedical samples collected by medical personnel are crucial.

470–4.5.2 INTERIM BIOLOGICAL AGENT DETECTION SYSTEM (IBADS). The Interim Biological Agent Detection System (IBADS) is an installed sensor that provides point detection of several airborne biological warfare agents on a near real time basis. The number of IBADS units is limited. They are cross–decked as directed by higher authority. One or more ships in a task group may have IBADS installed. The IBADS continuously samples outside air and detects changes in the amount of airborne particles in several size ranges. When a suspicious increase occurs in the number of particles of respirable size, IBADS prepares a sample for testing to identify selected biological agents.

470–4.5.2.1 IBADS Principles of Operation. The Interim Biological Agent Detection System (IBADS) detects and identifies certain agents in aerosol form in a three–step process. First, an aerodynamic particle sizer (APS), which has a laser type sensor, is used to establish a background level of the number of particles in the atmosphere that are within specified size ranges. Second, it uses mathematical algorithms to identify sudden, persistent increases in the particle count above the background level in the respirable size range. Then it collects a sample of particles from the air and mixes it with a sample collection solution. This wet sample is then tested with antibodies that react with specific biological agents. Porous, paper–like strips, called colorimetric tickets, are coated with reagents containing these antibodies. Each wet sample is manually tested with a colorimetric strip for each agent. If a colorimetric ticket shows a color change when exposed to the wet sample, the agent with which it reacts is present in the sample. A second test on the same sample is then conducted for confirmation.

NOTE

Reagents are not available for testing all potential agents.

470–4.5.2.2 IBADS Description. The IBADS detector unit, mounted high on the superstructure, contains the aerodynamic particle sizer (APS), a collection solution supply bottle and a wet cyclone sampler. The APS continuously samples the air around the ship and counts the particles in the air sample with a laser beam. The sampler uses a swirling motion to mix the airborne particles with a sample solution. The sample goes into a sample bottle, which is removed manually for testing with colormetric tickets. The detector unit is connected to the Display and Control System (DCS) inside the ship. The DCS is a computer that is programmed to record and store the particle count data received from the detector unit and to index it with the time and location of each measurement. The DCS receives an input from the ship's Global Positioning System (GPS) so the location at which each measurement was taken can be determined. The IBADS software uses a windows format. A functional diagram of the system is shown in Figure 470–4–12.

WARNING

The sample collection solution is an irritant to the eyes, respiratory system and skin.

470–4.5.2.3 IBADS Operator Functions. The operator activates the IBADS system and allows it to warm up for 20 minutes It takes 17 minutes for the DCS to obtain initialization data after a cold start. The operator prepares the solution in the sample solution supply bottle and places a sample bottle under the cyclone sampler. He runs tests on samples with colorimetric tickets and cleans the cyclone sampler after each sample is taken. On the DCS, the operator performs data retrieval functions and can direct the detector unit to prepare a wet sample.

470–4.6 COLLECTING BIOLOGICAL SAMPLES WITHOUT IBADS

470–4.6.1 BIOLOGICAL SURVEY PROCEDURES. If epidemiological indications or tactical observations provide a basis for suspecting that a biological attack may have occurred, biomedical and environmental samples can be collected and sent to laboratories that have the appropriate level of analytical capability. This is especially important if IBADS did not detect a biological agent and one or more of the indicators of a biological attack, listed in paragraph 470–4.5.1, are present. Biomedical samples are the responsibility of the Medical Department. Environmental sampling is performed by repair party monitoring teams.

470–4.6.1.1 Unique Characteristics of Biological Survey Procedures. Biological survey procedures differ from chemical and radiological surveys in several fundamental respects.

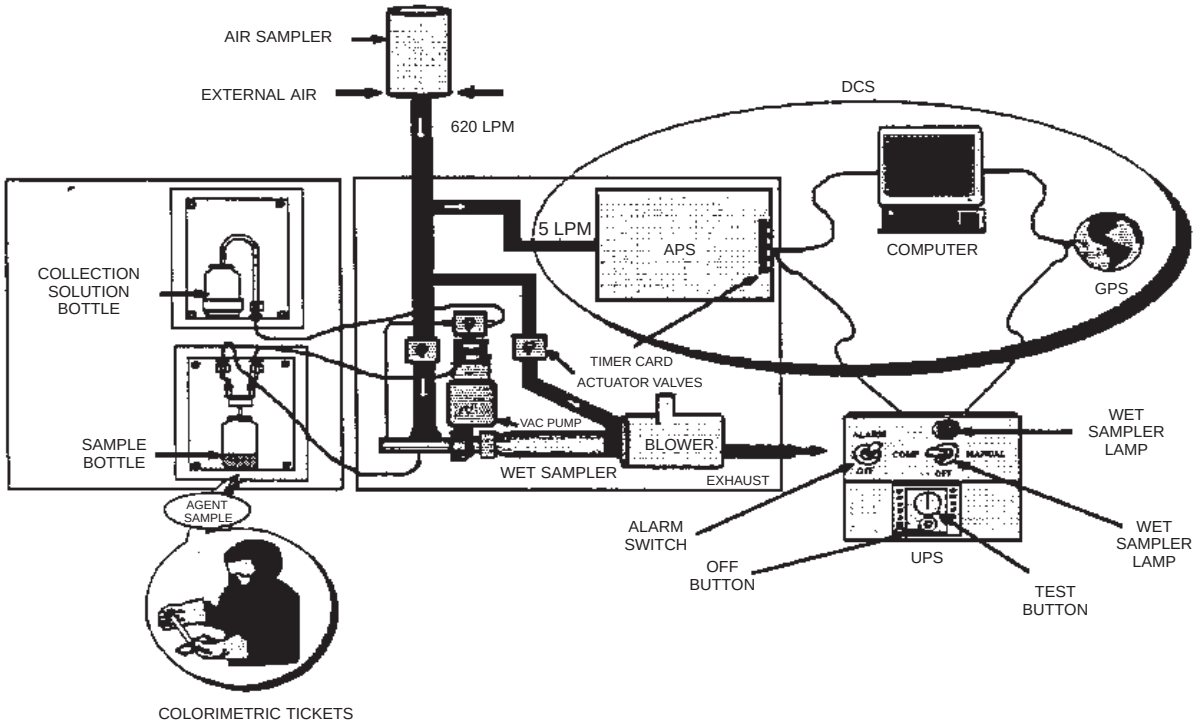

Figure 470–4–12. Interim Biological Agent Detection System (IBADS)

a. Biological surveys are conducted to collect samples, not to locate and immediately identify contaminants. The samples may be sent elsewhere for analysis, the results of which support the selection of appropriate medical treatment.

b. Sampling locations for biological surveys are selected based on the likelihood of finding viable samples for analysis. For example, many pathogens require moisture to stay alive. Dry aerosols tend to collect where dirt collects.

c. There is no distinction between a biological survey that takes place immediately after an attack and one that is performed later. In either case, samples are collected in the same locations, which are selected based on the likelihood of finding contamination rather than on determining whether or not vital stations are contaminated.

470–4.6.1.2 Sampling Locations. Given the lack of portable biological agent monitors, it may not be practical to define the boundaries of contamination with a shipboard survey. Collecting enough samples to do this would slow the process of shipping samples to a laboratory and performing the analysis. It is more important to collect a limited number of samples from locations where there is a high probability of contamination so that the presence or absence of an agent in the shipboard environment can be established.

a. Dry aerosol particles and liquid aerosol droplets tend to collect in the same places as dirt. Samples shall be collected from designated locations in each ventilation system including fan blades, filters and bends in the ducting.

b. Any pathogen that requires a liquid medium to remain viable is not likely to last long except in moist areas. The condensate on air conditioning cooling coils is a prime location for the growth of pathogens. Samples shall be taken in the initial survey and once a day thereafter until it has been determined that no pathogens are present in the condensate.

470–4.6.1.3 Biological Surveys and Forms. There are two types of biological surveys, internal and external. Internal survey routes are preplanned. They include ventilation systems and potable water taps. No specific locations are designated for external surveys. Topside monitoring teams shall attempt to locate moist areas in shaded locations and places where dirt collects for sampling. A format for establishing biological survey routes is provided in Figure 470–4–13. An example of an internal survey form, prepared in advance, is provided in

BIOLOGICAL SURVEY FORM

DATE:	MONITORING TEAM:
SHIP:	TYPE SURVEY:
EXIT:	ROUTE NUMBER:
DECON:	SHEET NUMBER:

Sample Number	Sample Location (Area/Object)	Sample Type			Sample Time	Sample Results
		Scoop	Swipe	Liquid		
1						
2						
3						
4						
5						
6						
7						

INSTRUCTIONS:

1. Internal sampling stations are established in advance. Topside stations are recorded as samples are taken. Internal routes include decon station where outside of sample containers is decontaminated. Topside routes require exit and reentry (via decon station) door numbers.
2. Prelabel sample containers for internal surveys with ship name, sample number and sample location. Use indelible ink.
3. Prelabel sample containers for topside samples with ship name and sample number. Sample location is added in decon station at end of route. Use indelible ink.
4. In decon station at end of each route (internal or topside survey), prepare samples for forwarding as follows:
   a. Add saline to scoop or swipe samples if they were already moist.
   b. Seal covers on containers with anti–seizing tape.
   c. Disinfect outside of containers with bleach.
   d. Place containers in sealable plastic bags.
   e. Label bags with name and location of ship, date and time of sample.

Figure 470–4–13. Biological Survey Form

Figure 470–4–14. An example of an external survey form, with entries describing the locations at which samples were collected and the type sample taken at each location, is provided in Figure 470–4–15. These entries are made by hand during an external survey rather than preprinted. The locations in which favorable conditions for collecting samples will be found are not known in advance.

470–4.6.1.4 Sampling Equipment. A biological sampling kit (BSK) can be assembled from standard stock and consumable items. The items are listed in Table 470–4–2. A BSK shall be assembled in an appropriate container for each survey team.

WARNING

Chemical protective gloves and masks shall be worn while collecting environmental biological samples. Survey team members and their clothing and equipment shall go through the decontamination process on completion of the survey.

Table 470–4–2. BIOLOGICAL SAMPLING KIT (BSK)

Description	NSN	Quantity
Tube. Biological Culture Sampling, Plastic with Transport Medium (U/I, package of 100)	6640–00–518–5462	6 each
Tube, Biological Culture Sampling, Plastic (U/I, package of 100)	6640–00–279–6484	2 each
Container for Liquid Samples *		3 each
Sterile Cotton Swabs		1 box
Metal Spoon		2 each
Pen with indelible ink		2 each
Saline Solution		
Ammunition Can or Wooden box for storage of BSK items		1 each
Styrofoam (cut to fit storage box)		As Needed
Plastic Bags (sealable)		12 each
Tape (Anti-Seizing)	8030–00–889–3535	1 roll
Labels, paper, pressure sensitive	7530–00–577–4376	1 sheet
Tape, pressure sensitive, adhesive	7510–00–582–4772	1 roll

* Any 140–150 ml (approximately 5 fluid oz.) glass container with a screw type cover can be used to collect liquid samples. The original contents of the container shall be completely removed and it shall be soaked, along with its cover, in a strong detergent solution. The container and its cover shall be thoroughly rinsed and dried.

470–4.6.1.5 Sampling Procedures for Dry or Moist Areas. If dirt deposits are thick enough to scoop, a clean spoon shall be used to collect samples and place them in a test tube or bottle. Otherwise, a sterile cotton swab shall be used to conduct a swipe test and then placed in a test tube. Forceps can be used to pick up suspected vectors or small solid objects. Two samples shall be taken at each location, one for each type of test tube in the BSK. Clean and disinfect the spoon or forceps between samples.

470–4.6.1.6 Sampling Procedures for Liquids. These procedures shall be used for collecting samples of potable water, condensate from air conditioner cooling coils or any other suspect liquid. A clean container with a screw type cover shall be used. The container and its cover shall be washed beforehand with detergent and thoroughly rinsed. Before taking the sample, rinse the inside of the container and its cover with the liquid from which the sample is being taken. The sample can be collected from a tap, with an eyedropper or by submersing the

BIOLOGICAL SURVEY FORM

DATE:		MONITORING TEAM:	REPAIR 2
SHIP:		TYPE SURVEY:	INTERNAL
EXIT:	N/A	ROUTE NUMBER:	1
DECON:	1–150–16	SHEET NUMBER:	1 OF 1

Sample Number	Sample Location (Area/Object)	Sample Type			Sample Time	Sample Results
		Scoop	Swipe	Liquid		
1	Fan Room 1–138–3E vent filter	Preferred	If needed			
2	Fan Room 1–138–3E supply fan blades	Preferred	If needed			
3	Fan Room 1–138–3E cooling coils		If needed	Preferred		
4	Crew Berthing 1–145–1L vent inspection cover	Preferred	If needed			
5	Crew's Head 1–155–1L deck drain	If needed	If needed	Preferred		
6	Crew's Head 1–155–1L potable water tap			Preferred		
7	Crew's Head 1–155–1L shower sides, deck		If needed	Preferred		

INSTRUCTIONS:

1. Internal sampling stations are established in advance. Topside stations are recorded as samples are taken. Internal routes include decon station where outside of sample containers is decontaminated. Topside routes require exit and reentry (via decon station) door numbers.
2. Prelabel sample containers for internal surveys with ship name, sample number and sample location. Use indelible ink.
3. Prelabel sample containers for topside samples with ship name and sample number. Sample location is added in decon station at end of route. Use indelible ink.
4. In decon station at end of each route (internal or topside survey), prepare samples for forwarding as follows:
   a. Add saline to scoop or swipe samples if they were already moist.
   b. Seal covers on containers with anti–seizing tape.
   c. Disinfect outside of containers with bleach.
   d. Place containers in sealable plastic bags.
   e. Label bags with name and location of ship, date and time of sample.

Figure 470–4–14. Sample Internal Biological Survey Form (preprinted route)

BIOLOGICAL SURVEY FORM

DATE:		MONITORING TEAM:	REPAIR 3
SHIP:	USS HATTERAS	TYPE SURVEY:	TOPSIDE
EXIT:	N/A	ROUTE NUMBER:	1
DECON:	1–65–2	SHEET NUMBER:	1 OF 1

Sample Number	Sample Location (Area/Object)	Sample Type			Sample Time	Sample Results
		Scoop	Swipe	Liquid		
1	*Main Deck, port side, Fr. 52*		X		*1410*	
2	*Helo Deck, Fr. 95, centerline, padeye*	X	X		*1414*	
3	*Signal Bridge, under flag bag*		X		*1421*	
4	*Motor Whale Boat*			X	*1426*	
5	*Vent Supply 1–45–1, inlet screen*	X	X		*1430*	
6	*03 level, stbd side, deck drain*	X	X		*1434*	
7						

INSTRUCTIONS:

1. Internal sampling stations are established in advance. Topside stations are recorded as samples are taken. Internal routes include decon station where outside of sample containers is decontaminated. Topside routes require exit and reentry (via decon station) door numbers.
2. Prelabel sample containers for internal surveys with ship name, sample number and sample location. Use indelible ink.
3. Prelabel sample containers for topside samples with ship name and sample number. Sample location is added in decon station at end of route. Use indelible ink.
4. In decon station at end of each route (internal or topside survey), prepare samples for forwarding as follows:
   a. Add saline to scoop or swipe samples if they were already moist.
   b. Seal covers on containers with anti–seizing tape.
   c. Disinfect outside of containers with bleach.
   d. Place containers in sealable plastic bags.
   e. Label bags with name and location of ship, date and time of sample.

Figure 470–4–15. Sample Topside Biological Survey Form *(handwritten entries shown in italics)*

container in the liquid. After the container is closed with the sample in it, the outside of the container and the cover shall be swabbed with bleach, carefully rinsed and dried. Clean and disinfect the eyedropper between samples.

470–4.6.1.7 Additional Requirements for Potable Water Samples. The procedures in paragraph 470–4.6.1.6 apply to the collection of potable water samples with some additional requirements. Collect samples at the farthest taps from the disinfection system. Record on the label the residual chlorine or bromine levels at the tap and in the storage tanks. Collect the samples in accordance with NAVMED P5010, **Manual of Naval Preventive Medicine.**

470–4.6.1.8 Prelabeling Sample Containers. A sample container shall be prelabeled with indelible ink for each designated interior location. Samples shall be taken from multiple locations in large areas. As discussed in paragraph 470–4.6.1.3, specific topside locations are not designated for external surveys. Instead, survey teams attempt to locate moist, shaded areas from which to obtain samples. Therefore, sample containers for external surveys shall be prelabeled only with sample numbers. The location of each sample shall be recorded on the survey form during the survey. At the completion of the survey, when the containers are being prepared for forwarding at the decontamination station, the locations recorded on the survey form shall be transferred to the labels of the corresponding sample containers.

470–4.6.1.9 Support for Biological Surveys. Repair party monitoring teams are responsible for environmental sampling but it is advisable to provide them with support, if possible. In order of preference, a microbiologist, a laboratory technician or a medical corpsman should assist each monitoring team if such individuals are available on board or from ships in company.

470–4.6.2 FORWARDING BIOLOGICAL SAMPLES. Reports of suspected biological warfare attacks shall be made in accordance with NWP 3–20.31, **Surface Ship Survivability**. Instructions for the disposition of IBADS samples, environmental samples collected during surveys and biomedical samples shall be requested in these reports. There are strict requirements for transporting potentially hazardous biological material. Samples shall be packed in ice to await shipping instructions from higher authority. Access to the samples shall be limited and legal chain of custody records shall be maintained in accordance with directions from higher authority.

SECTION 5.
INDIVIDUAL PROTECTION

470–5.1 INDIVIDUAL PROTECTION REQUIREMENTS

470–5.1.1 INDIVIDUAL PROTECTION REQUIREMENTS IN A CHEMICAL HAZARD ENVIRONMENT. The protection required against chemical agents is related to the hazard environments described in paragraph 470–2.3. The Chemical Protective Ensemble (CPE) consists of a protective mask, overgarment, boots and gloves. One configuration of the CPE, with the Chemical Protective Overgarment (CPO), is shown in Figure 470–5–1. In selecting a protective posture, the primary concern is whether the complete protective ensemble is required. If no percutaneous (skin) hazard is present only a protective mask is needed. This is a great advantage in avoiding heat stress. Also, some of the clothing items have operational use limitations. If there is no percutaneous hazard and the clothing is not placed in use, these limitations can be avoided and stocks of these items can be preserved.

470–5.1.2 INDIVIDUAL PROTECTION REQUIREMENTS IN A BIOLOGICAL HAZARD ENVIRONMENT. The protective mask is the most important element in biological protection. Although some toxins can harm the skin directly, most pathogens and natural toxins can enter the body only by inhalation, ingestion or through breaks in the skin. The chemical protective ensemble provides effective protection against biological warfare agents. Thus, if the CPE is required based on the chemical threat, protection against biological agents is provided as well. However, if the threat is limited to biological warfare, NAVMED P–5059, **NATO Handbook on the Medical Aspects of NBC Defensive Operations**, states that standard uniform clothing of good quality offers reasonable protection against biological agent aerosols. Complete body coverage is required if the threat includes toxins that can injure the skin. A protective mask is required in any case.

470–5.2 EYE–RESPIRATORY PROTECTION EQUIPMENT

WARNING

Chemical–biological protective masks do not protect against carbon monoxide, carbon dioxide or ammonia. They do not protect against an oxygen deficient atmosphere, such as a fire environment.

470–5.2.1 MCU–2/P PROTECTIVE MASK. The MCU–2/P series protective mask, shown in Figure 470–5–2, is the eye–respiratory protection equipment used aboard ship for CBR defense. The MCU–2A/P is now being issued. The MCU–2/P series mask is designed to protect the face, eyes, and respiratory tract of the user from tactical concentrations of chemical and biological agents, toxins, and radioactive fallout particles. The mask has a unimolded, silicone rubber face piece and a single flexible lens bonded onto the face piece. The large lens gives the user a wide field of vision. It has a single filter and two voicemitters, one on the front of the mask for speaking directly into a telephone or radio handset and one at the side to allow personnel nearby to hear. A nosecup with two inlet valves fits over the nose and mouth. It directs incoming air across the inside of the lens to reduce fogging. The mask has a drinking tube that connects to a canteen with an M1 cap.

470–5.2.1.1 Equipment Issued with the MCU–2/P Series Mask. The mask is issued with the following additional equipment:

a. A mask carrier made of mildew resistant nylon.

b. An M–1 mask waterproofing storage bag.

c. A clear face piece outsert for protection of the lens. Information on outsert use is provided in paragraph 470–5.2.5.

d. Two C2 canisters. Information on canister use is provided in paragraph 470–5.2.6.

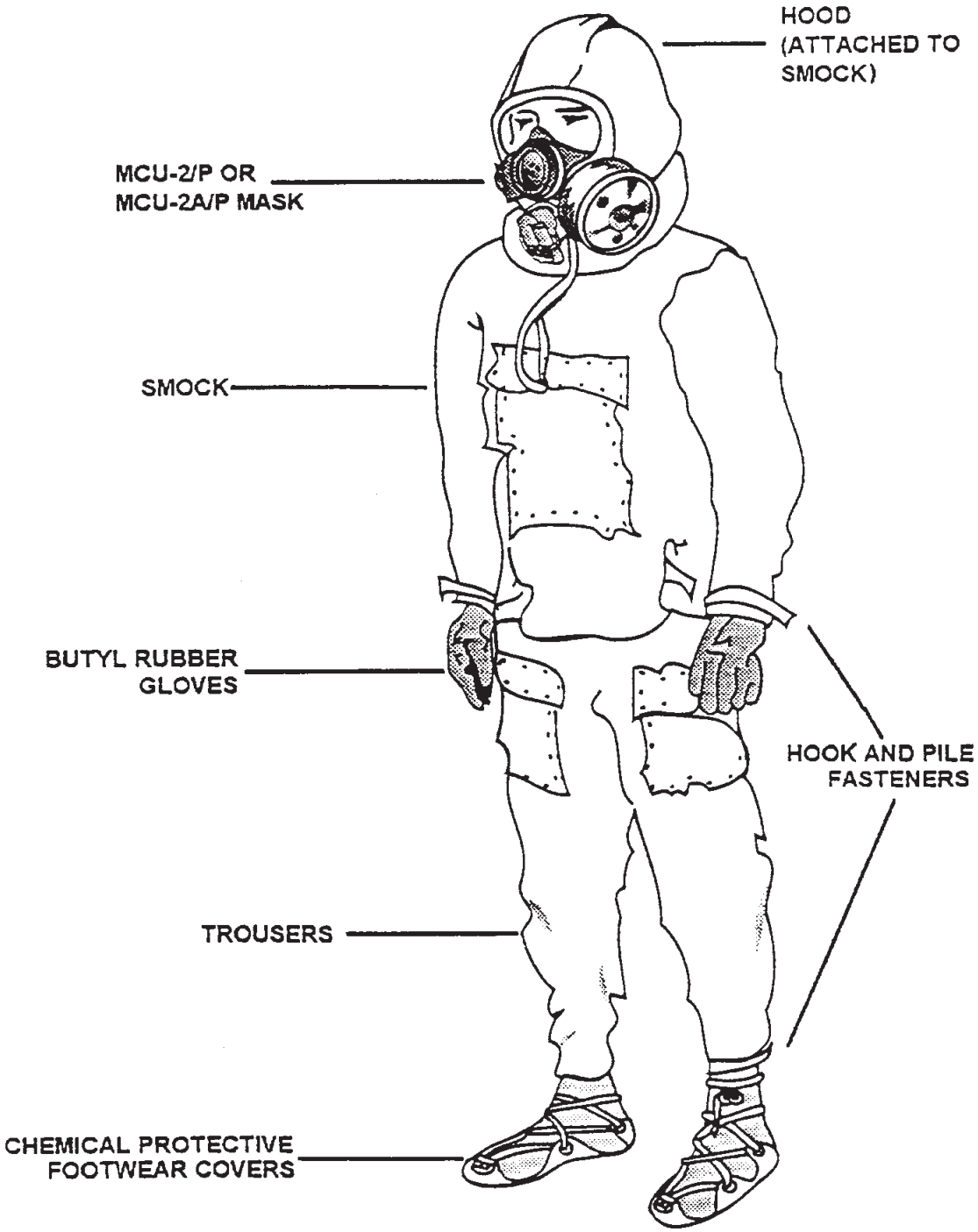

Figure 470–5–1. Chemical Protective Ensemble (CPE)

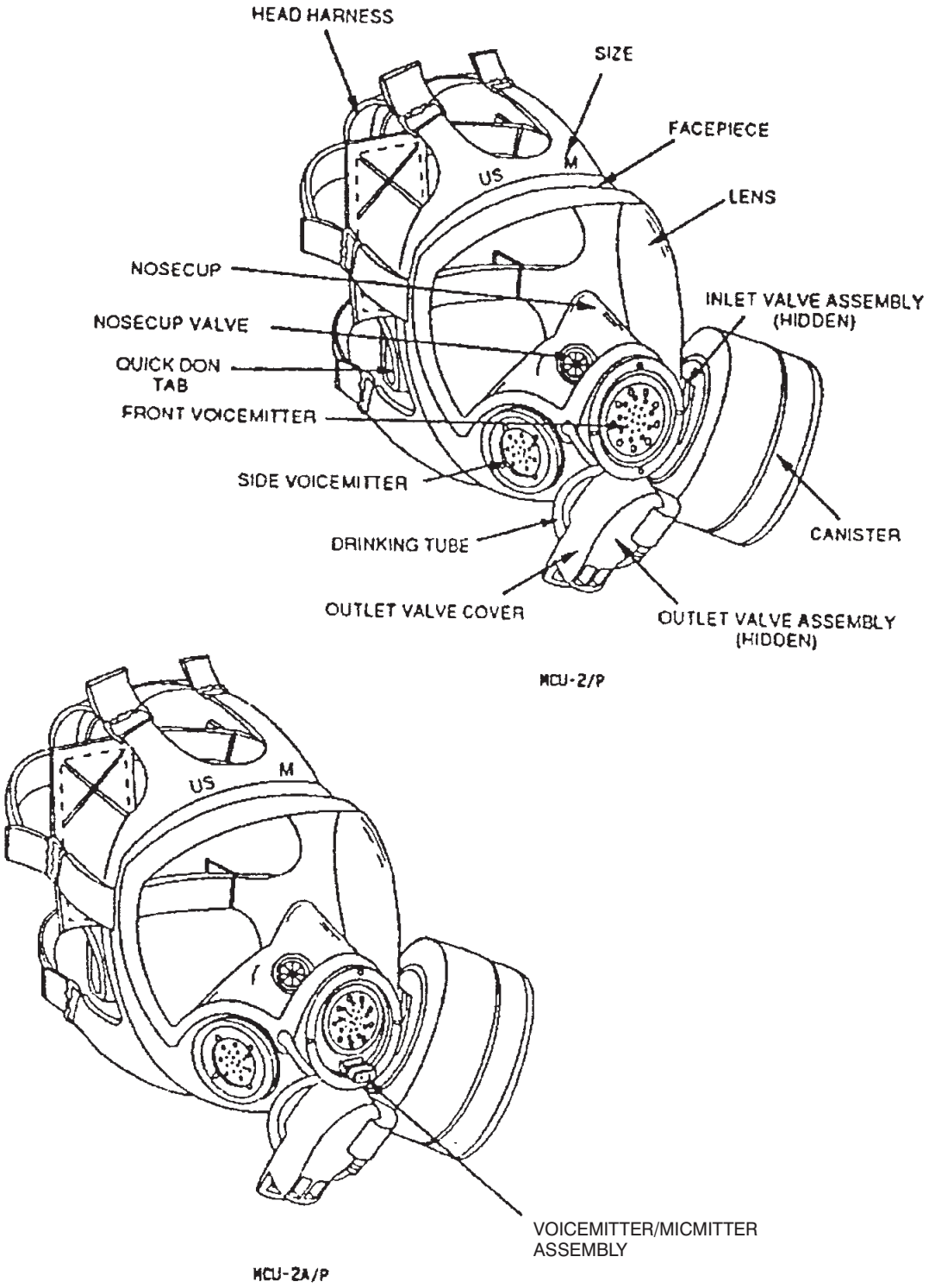

Figure 470–5–2. MCU–2/P and MCU–2A/P Protective Masks

470–5.2.1.2 Additional Accessories for the MCU–2/P Series Mask. The following accessories are authorized for use with the mask:

a. Combat spectacles. Additional information is provided in paragraph 470–5.2.7.

b. Canteen equipped with an M1 cap. Additional information is provided in paragraph 470–5.2.8.

c. Canister dust cover to prevent airborne dust and sand from reducing the service life of the canister.

470–5.2.1.3 MCU–2/P and MCU–2A/P Maintenance and Use. Detailed instructions on mask sizing, mask adjustment, operating instructions and maintenance instructions, are provided in the technical manual, S6470–AB–MMO–010, **Operation and Maintenance Instructions with Illustrated Parts Breakdown, Chemical–Biological Mask, Type MCU–2/P, MCU–2A/P**. This manual also contains information on obtaining and using authorized accessories.

470–5.2.2 FITTING AND STOWING THE MCU–2/P MASK. The MCU–2/P protective mask is stocked in three sizes: large, medium and small. The following paragraphs describe the fitting procedures for determining the size(s) that can provide adequate protection to each individual. Priority for each size mask shall be given to individuals who can only be fitted (protected) with that size. A significant percentage of the population can obtain adequate protection with more than one size of the mask. If the stock of one size has been depleted and if individuals who can wear only that size are left, it may be necessary to reassign masks of that size that were issued to individuals who can wear another size.

470–5.2.2.1 Initial Sizing. Since the MCU–2/P protective mask is available in three sizes, it is important to determine which size will provide the best fit and maximum protection to an individual. To simplify mask size selection, initial sizing should be accomplished using a caliper to measure face length (tip of chin to nasal root depression) in accordance with the instructions contained in the MCU–2/P manual. A caliper can be fabricated as described in the technical manual, or other available calipers can be adapted by using the specified dimensions for the small, medium, and large size ranges. The sizing scale in the technical manual is based on the following measurements:

Large	> 4.924”	(12.51 cm)
Medium	4.489” to 4.923”	(11.40 to 12.50 cm)
Small	< 4.488”	(11.39 cm)

470–5.2.2.2 Visual Check. After initial sizing with the caliper, a visual check should then be performed by a qualified person. Facial measurements cannot account for some factors that shall be evaluated subjectively. For example, fatty tissue on the face should generally make it easier to fit a mask. The judgment of an experienced fitter includes factors such as the relationship between the hairline and the mask periphery, which cannot be evaluated with the face length measurement. The visual check for proper fit should be done according to the following criteria:

a. The face piece should come well up on the forehead, but should not extend over the hairline at any point.

b. The straps should not cut into the ears.

c. The bottom part of the face piece should not cut into the throat.

d. The nosecup should not interfere with vision or press painfully on the nose.

e. For persons wearing combat spectacles, there should be no interference between the nosecup and the bridge of the spectacles.

WARNING

During check for leaks, only a slight inward deflection of face piece and lens is required. If inhalation is too forceful, the face piece will collapse against the face and the mask outlet valve may become dislodged.

470–5.2.2.3 Check for Leaks. The face piece seal should be checked for leaks using the negative pressure check procedure described in the technical manual. The individual covers the canister air inlet opening with his or her hand and inhales lightly to deflect the face piece and lens slightly inward. The individual then holds his or her breath for five to ten seconds to determine if the face piece and lens remain in the deflected position. Only a slight inward deflection of the face piece and lens is required. If face piece and lens do not remain deflected, the cause must be found. Leaks around the edge of the face piece can be caused by poor adjustment or incorrect size selection. It is important to determine the cause of the leaks and readjust the mask according to the technical manual, replace it with a different size mask or repair it, as appropriate. The drinking tube should also be checked for leaks in accordance with the procedures in the technical manual.

470–5.2.2.4 Wearer Adjustment. Adjustment of the mask by the wearer is important for maximum protection and comfort, and should be carried out according to the procedures outlined in the technical manual. It is also important to remember that a leak–proof fit cannot be expected unless the wearer is clean–shaven.

470–5.2.2.5 Mask Stowage. After an individual completes MCU–2/P fitting procedures, he or she then removes and stows the mask in the carrier in the following manner so it is ready to be donned quickly.

a. Loosen mask neck straps by using finger to rotate rear of buckle forward.

b. Grasp mask by outlet valve assembly and remove by pulling down, outward and up.

c. Install outsert on mask.

d. Stow mask in carrier.

If MOPP level 1 has been implemented under the Mission Oriented Protective Posture (MOPP) System, reverse the head harness over the face piece so the straps will not interfere with placing the mask directly on face. Then stow it in the mask carrier. If necessary, due to threat conditions, the mask can be stowed this way for months with little risk of deformation. **The mask shall not be stowed with the head harness reversed except when the MOPP system is in effect.**

470–5.2.3 DONNING PROCEDURES FOR THE MCU–2/P SERIES MASK. These procedures apply when the presence of contamination is suspected. Unapproved eyeglasses and contact lenses shall be removed first and replaced by authorized combat spectacles.

a. **STOP BREATHING**.

b. Close eyes tightly (open briefly as necessary to complete donning procedure).

c. Remove headgear.

d. Open mask carrier.

WARNING

Do not remove the mask from the carrier by pulling on the outlet valve.

e. Grasp mask by front portion of face piece in area of voicemitter and outlet valve assembly. Withdraw mask from carrier.

f. Hold outlet valve assembly in palm of one hand. Using free hand, push forehead hair aside. Place mask on face forcing chincup very tightly against chin. Pull head harness over head using quick–don tab.

g. Grasp a neck strap in each hand and tighten with small, jerking motions.

h. **EXHALE**.

i. Open eyes.

j. Remove outsert if required by command policy and place it in carrier.

WARNING

If inhalation is too forceful while checking for leaks, face piece will collapse against the face and outlet valve may become dislodged.

k. Press palm of one hand over canister opening. Inhale to determine whether airtight seal of mask against face has been obtained. If mask collapses slightly while inhaling and remains collapsed while holding breath, it is leak–tight. If mask does not collapse, check for hair or other material between mask seal and face. Tighten straps if necessary and recheck.

l. After a proper seal is obtained, open eyes and **RESUME NORMAL BREATHING**.

m. Close carrier.

470–5.2.4 DOFFING PROCEDURES FOR THE MCU–2/P SERIES MASK. These procedures apply to masks that have **not** been exposed to contamination or, if they have been exposed, have been decontaminated.

a. Loosen neck straps by rotating buckles forward.

b. Grasp mask by outlet valve body and remove by pulling down, outward and up.

c. Install outsert, if necessary.

d. Reverse head harness over mask face piece and shake or wipe moisture from inside mask.

e. Clean and dry mask in accordance with current PMS requirements.

f. Stow mask in carrier in accordance with paragraph 470–5.2.2.5.

470–5.2.5 OUTSERT. Clear plastic outserts that fit over the mask lens can serve two purposes. They protect the lens from scratches when it is stored in the carrier and they protect the lens from chemical agent droplets, oil and other petroleum products when the mask is worn. Outserts shall be used on masks stowed in carriers. Use of outserts when masks are worn is subject to command policy.

470–5.2.6 C2 CANISTER. The MCU–2/P series protective mask uses a single filter canister, designated C2. This canister has a NATO Standard thread and screws into the inlet valve body. In the initial configuration, the canister is on the left side of the mask. It can be moved to the right side by switching the locations of the inlet valve body and the side voicemitter.

470–5.2.6.1 Canister Issue. Two canisters are issued with the mask. A third is issued by the ship. Two shall remain sealed in their packaging and reserved for wartime use. The third is attached to the mask for training and acclimation. Sixty days after it is removed from its packaging, it shall be marked as a training canister in accordance with paragraph 470–5.2.6.2.

470–5.2.6.2 Mask Canister Filter Life. The C2 canister has an operational service life as follows based on a worst case environment (hot climate and high humidity):

a. In the absence of agent, shipboard personnel can retain canisters for operational use for 60 days after the seal is removed from the packaging. Canisters open for more than 60 days shall be retained for training only or discarded. It is necessary to identify training canisters that have exceeded 60 days of operational use. A white stripe painted around the rim of each canister is recommended.

b. Canisters are good for one attack of blood agent, after which they shall be replaced. Canisters are good for 30 days following exposure to other chemical threat agents, as long as the 60–day limit after removal of the packaging seal is not exceeded.

c. Canisters shall be replaced if

1. the charcoal is wet.

2. the canister has been damaged.

3. the canister is clogged and causes excessive breathing resistance.

4. charcoal dust is left on face after use.

5. replacement is directed by the Commanding Officer.

d. The guidance in this paragraph does not apply to canister replacement on masks issued for use in response to radiological casualties associated with the Naval Nuclear Propulsion Program.

WARNING

Combat spectacles are the only eyeglasses approved for use with the MCU–2/P series mask. Contact lenses shall not be worn.

470–5.2.7 COMBAT SPECTACLES. Combat spectacles are available in two sizes for use with the MCU–2/P series mask. The Medical Department is responsible for ordering and issuing combat spectacles.

470–5.2.8 CANTEEN. A one–quart canteen is used aboard ship. The drinking tube of the MCU–2/P series mask attaches to the M1 cap on the canteen. The cap contains a pin that depresses a diaphragm on the end of the drinking tube, allowing the wearer to replenish fluids while wearing the mask. Covers and belts for carrying the canteens may be ordered separately.

470–5.2.9 MCU–2A/P PROTECTIVE MASK. The latest variant in the MCU–2/P mask series is the MCU–2A/P Mask. It contains the same features as the MCU–2/P mask and, with modifications, may be integrated into the ship's Interior Voice Communications System (IVCS) and the Flight Deck Communications System. The priority for issue of MCU–2A/P masks is:

a. Flight deck supervisory personnel.

b. Personnel at GQ stations outside of CPS TP zones who require hands–free access to IVCS.

c. Remaining flight deck personnel.

d. Personnel at GQ stations inside of CPS TP zones who require hands–free access to IVCS.

470–5.2.10 VOICE AMPLIFIER. The Audio Projection Set (APS), AN/PNT–2, enhances voice communications when attached to the front voicemitter of the MCU–2/P series mask. It is battery powered.

470–5.2.10.1 Allocation of Audio Projection Sets. Quantities sufficient to accommodate the following are provided:

a. Ten per DC repair station

b. Three per decon station

c. Five for flight deck–hangar deck on small deck ships

d. Sixty for flight deck–hangar deck on large deck ships

e. Ten for CIC on ships without AEGIS

f. Twenty for CIC on AEGIS ships

Where additional units are available, distribution is determined by the Commanding Officer and is recommended to be Commanding Officer, Executive Officer, Chief Engineer, Operations Officer, Weapons Officer, CIC Officer, Tactical Action Officer, Electronic Warfare Officer, Medical Officer, Officer of the Deck, Junior Officer of the Deck, Navigator, Bos'ns Mate of the watch, Helm, Lee Helm, Forward Lookout, After Lookout, Engineering Officer of the Watch, Engineering Department personnel (four), Damage Control Assistant, Senior Enlisted Damage Control personnel (NEC 4811), other damage control personnel and phone talkers as needed and as quantities permit. In some cases, such as lookouts, it may be possible to provide them MCU–2A/P's with connections to IVCS instead of issuing APS's to them.

470–5.2.10.2 Stowage, Issue and Use of Audio Projection Sets. Ten sets and batteries for each shall be stowed at each damage control repair station. The remainder shall be stowed with masks either in CBR–D equipment stowage lockers or other designated locations. Audio Projection Sets and batteries shall be issued at MOPP 1. Install an APS on each mask and place the mask back in the mask carrier. Place the batteries in the pocket on the outside of the carrier. Batteries shall be installed at MOPP 3 at the same time as new canisters are placed on the mask. When standing down from MOPP, batteries shall be removed from the APS and stowed in a plastic bag with the APS.

470–5.2.10.3 Maintenance of the Audio Projection Set. The technical manual for the APS is TM SE101–B3–OMI–010, **Operation and Maintenance Instructions for Audio Projection Sets AN/PNT–2.**

470–5.2.11 MCK–3/P PROTECTIVE MASK (AIRCREW). The MCK–3/P mask is used by Navy fixed wing and helicopter aircrews. It cannot be used without a tactical ventilator to provide filtered air and is not compatible with the Chemical Protective Ensemble (CPE).

470–5.3 CHEMICAL PROTECTIVE CLOTHING

470–5.3.1 CHEMICAL PROTECTIVE OVERGARMENT. The Chemical Protective Overgarment (CPO) is made of material that is permeable to water vapor, that is, it allows the escape of moisture from perspiration. This reduces heat stress on the wearer, but will not prevent it entirely in a hot climate. The function of the CPO is to protect the wearer from threat levels of chemical agents in liquid form and from the associated vapor. The inner anti–gas layer contains activated charcoal to entraps chemical agent vapors. The outer layer, which is made of modacrylic–nylon, repels neat (unthickened) agent or spreads it over a wider surface area. This spreading process is called wicking. It enhances the evaporation of liquid agent so that less of it is absorbed and reaches the inner anti–gas layer. Thickened agent will not spread very much, so it must be wiped off.

470–5.3.1.1 Chemical Protective Overgarment Description. The Chemical Protective Overgarment (CPO) consists of two pieces, a smock with an attached hood and trousers. They can be seen as a part of the CPE in Figure 470–5–1. The smock and trousers are generously cut to fit over the general duty uniform. The smock has a back gusset to allow freedom of movement. There is a large front flap pocket for storing Atropine Auto Injectors, Pralidoxime Chloride Auto Injectors (2 PAM–CL), Nerve Agent Pre–treatment Pyridostigmine (NAPP)

and the M291 Skin Decontamination Kit. The smock also has a sleeve patch for securing detector paper. The smock can be adjusted with hook and pile fasteners at the wrist and waist. The trousers have a front gusset for ease of fit, and suspenders which cross the shoulders and tie in the front. Hook and pile fasteners are located at the waist and at the bottom of each leg for adjustment. The CPO comes in four sizes; small, medium, large and X–large.

470–5.3.1.2 Chemical Protective Overgarment Packaging, Shelf Life and Operational Life. The CPO smock and trousers are each vacuum packed in a plastic or foil bag. Each is then heat–sealed in a plastic overbag. Two packages (one smock and one pair of trousers) are bound together by a rubber band for issue as one overgarment. The CPO has a shelf life of ten years when unopened. The wear time in a contaminated environment is six hours. In an uncontaminated environment, the CPO has a total cumulative wear time of 100 hours within 30 days after opening the protective packages in which it is issued. The original packaging shall be retained after it has been opened for stowage of uncontaminated CPO's between uses.

WARNING

It is important to conserve CPO's for their intended use. CPO's shall not be used for protection from nuclear fallout or for nuclear weapon accident or incident (NWAI) response unless a chemical threat exists. For radiological contamination, personnel are sufficiently protected by wearing the protective mask and standard battle dress or anti–contamination clothing. More information on radiological protection can be found in **NSTM Chapter 070, Nuclear Defense at Sea and Radiological Recovery of Ships After Nuclear Weapons Explosion**.

470–5.3.1.3 Use of the CPO in an Uncontaminated Environment. The wear time of the CPO in an uncontaminated environment is subject to the following constraints:

a. An **uncontaminated** CPO shall be enclosed between uses in the plastic or foil bag in which it was originally sealed. This protects the charcoal in the suit from shipboard materials that can damage it such as petroleum–oil–lubricant (POL) products and cleaning solvents. Wear time starts (subtracts from the 100 available hours) when the CPO is donned and stops when it is placed in the protective bag.

b. Wear time shall be recorded for each CPO. A format is provided in Figure 470–5–3. This form can be reproduced locally on 90–lb. paper or heavier stock. The form may be reproduced on 8.5" x 11" stock or on 8" x 5" cards with the instructions printed on the back. The record for each suit shall be kept in the bag with the suit when it is in storage and in the pocket of the suit when in use.

c. CPO's that have come in contact with POL's shall be replaced.

d. Damaged CPO's shall be replaced.

e. Expired CPO's shall be replaced.

470–5.3.1.4 Use of the CPO in a Contaminated Environment. In a contaminated environment the six–hour criterion, versus the 100–hour criterion, becomes the controlling parameter. For example, if the cumulative wear time is 98 hours, and the environment becomes contaminated, the CPO may be worn an additional six hours for a maximum cumulative wear time of 104 hours.

470–5.3.1.5 Chemical Protective Overgarment Training Suit. The shipboard allowance of CPO's includes a quantity of overgarments for training which is equal to 20 percent of ship's manning. Additionally, CPO's that are removed from service due to any of the limitations described in paragraph 470–5.3.1.3, if in good condition, should be used for training. It is necessary to identify CPO training suits that have been removed from operational service. White bands two inches wide that are painted around the sleeves of the smock and the legs of the trousers are recommended. Masking tape can be used in a similar manner. Overgarments that are used only for acclimation training need not be modified further. However, if CPO's are cut off during training in contaminated doffing procedures, they are rendered useless for further training. With the following modifications these training CPO's can be reused.

CHEMICAL PROTECTIVE OVERGARMENT
WEAR TIME AND INSPECTION RECORD

Date/Time Unpacked	Inspection Results	Date/Time Repacked	Inspection Results	Cumulative Wear Time

Inspection Guides

1. Perform inspection each time this overgarment is packed or unpacked. Record results as SAT or UNSAT and initial.
2. Check overgarment for cuts, abrasions and discoloration. Discontinue operational use of damaged items.
3. Check high wear areas such as elbows, armpits, knees, seat, crotch and packing creases for threadbare appearance. Discontinue operational use if threadbare.
4. The CPO is limited to a cumulative wear time of 100 hours in an uncontaminated environment as long as the 30–day operational life is not exceeded.
5. The CPO is limited to six hours of wear in a contaminated environment, either liquid or vapor.
6. The CPO cannot be laundered.
7. If overgarment is converted to training use, enter the date in the first column followed by TRAINING USE ONLY. Continue to maintain record with overgarment for practice in those procedures.

DO NOT INSPECT OR REPACK GARMENTS EXPOSED TO CHEMICAL AGENTS.

Figure 470–5–3. Chemical Protective Overgarment Wear Time and Inspection Record

a. Smock:

1. Determine where the cut is normally made in accordance with the instructions in Section 7 of this chapter and draw a line.

2. Cut along the line, from the bottom of the smock to the hood through the drawstring.

NOTE

The Advanced Chemical Protective Garment (ACPG) will be phased in to replace the CPO over several years. Issue and use of CPO's will continue until stocks are exhausted and shelf life has expired.

470–5.3.2 ADVANCED CHEMICAL PROTECTIVE GARMENT (ACPG). The Advanced Chemical Protective Garment is an overgarment that is worn over the duty uniform or underwear. It was developed jointly with the US Army, Air Force and Marine Corps under the Joint Lightweight Integrated Suit Technology (JSLIST) Program and is known by the other services as the JSLIST chemical protective garment. It is made of material that allows water vapor to escape. This allows perspiration to pass through, reducing heat stress but not eliminating it entirely in warm weather. The ACPG material has a nylon–cotton (NyCo) poplin outer shell that is treated to repel water and oil and a chemical protective inner liner containing activated carbon. The ACPG provides protection against chemical agents in liquid, vapor and aerosol form.

470–5.3.2.1 ACPG Configuration. The ACPG consists of two pieces, a coat and trousers, that are packaged separately and issued under different stock numbers. The coat is hip length and has an integral hood. It has a front slide fastener that, when closed, is covered by a flap with hook and pile fasteners. The sleeves have hook and pile fasteners at the wrists and there is an elastic draw string at the waist. The elbows are reinforced. There is a pocket on the left sleeve for storing Atropine auto injectors, Pralidoxime auto injectors (2 PAM–CL), Nerve Agent Pre–treatment Pyridostigmine (NAPP) and the M291 Skin Decontamination Kit. A loop in the elastic draw string at the back of the coat is used in MOPP 4 to keep the coat from riding up and exposing the back. When used for this purpose, this loop is pulled between the legs from back to front and secured to the snapped webbing strip at the base of the lapel. The trousers have a high waist, adjustable suspenders, a front slide fastener with a snap at the top and hook and pile fasteners for waist adjustment and ankle closure. Each trouser leg has a bellows cargo pocket. The ACPG material is reinforced in the elbows and knees. The ACPG coat and trousers are shown in Figure 470–5–4.

470–5.3.2.2 Fitting the ACPG. The ACPG comes in five sizes: small–short (SS); medium–regular (MR); medium–long (ML) large–regular (LR) and large long (LL). The recommended coat and trouser sizes for each individual are determined from sizing charts provided in Figure 470–5–5 and Figure 470–5–6, respectively. This guidance is general in nature. Each individual should wear the size that is the most form fitting yet comfortable.

WARNING

It is important to conserve ACPG's for their intended use. ACPG's shall not be used for protection from nuclear fallout or for nuclear weapon accident or incident (NWAI) response unless a chemical threat exists. Wearing the protective mask and layered battle dress or anti–contamination clothing provides sufficient protection against radiological contamination. Radiological Defense is discussed in **NSTM Chapter 070, Nuclear Defense at Sea and Radiological Recovery of Ships After Nuclear Weapons Explosion**.

470–5.3.2.3 ACPG Storage, Shelf Life and Operational Life. ACPG's are vacuum packed and heat–sealed in nylon foil. An outer plastic bag provides additional protection against exposure to harmful substances but it is not airtight. A reusable, sealable plastic storage bag is packed with each item. The coat bag is folded in with the coat. The trouser bag is packed in the trouser cargo pocket. The ACPG has a shelf life of five years if unopened. Shelf life may be extended based on results from the stock surveillance program. Once the seal on the original factory packaging is broken, the operational service life of the ACPG in an **uncontaminated** environment is 45 wear days with up to six launderings within 120 consecutive calendar days. It provides protection for 24 hours in a **contaminated** environment.

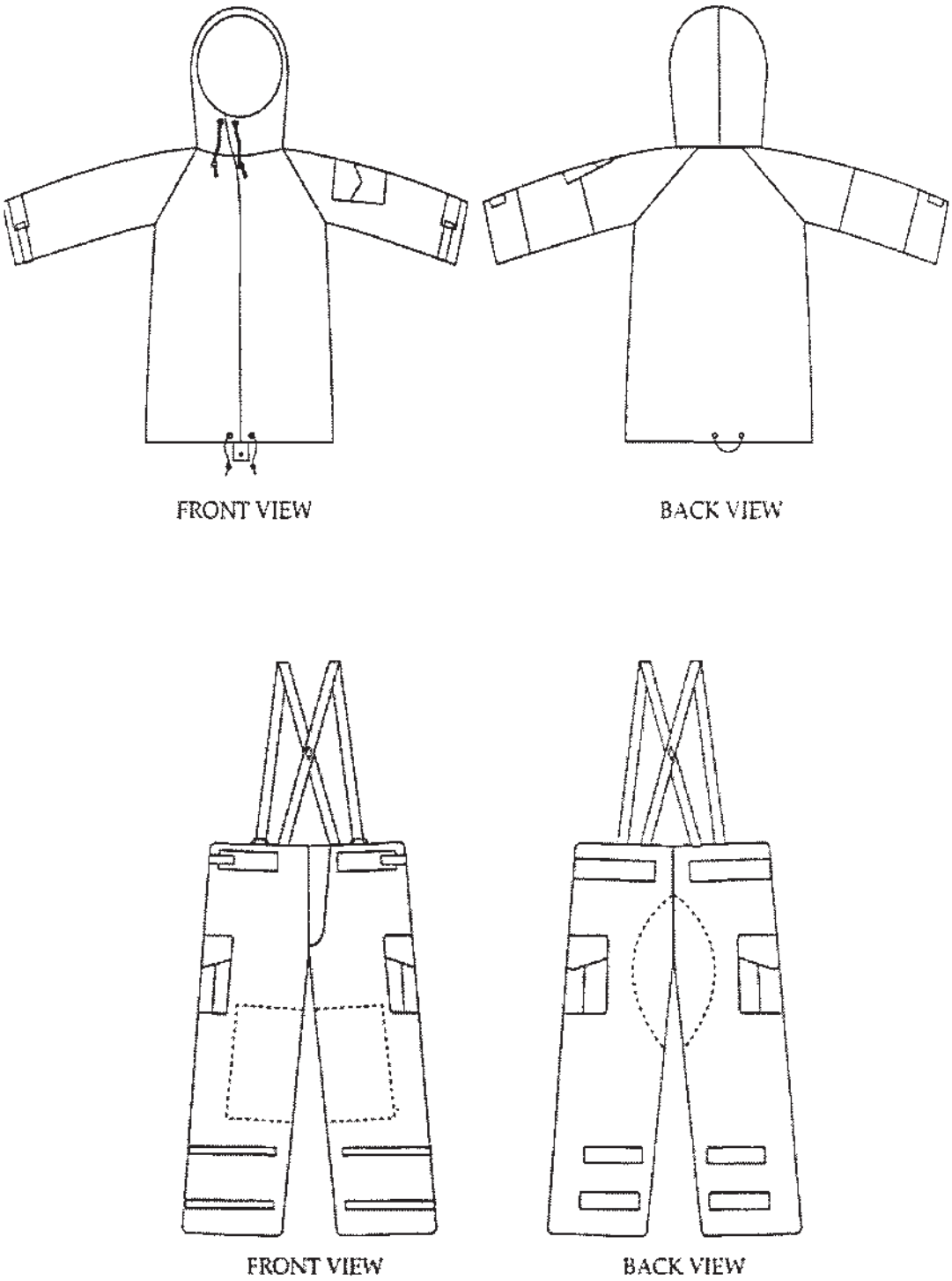

Figure 470–5–4. Advanced Chemical Protective Garment (ACPG)

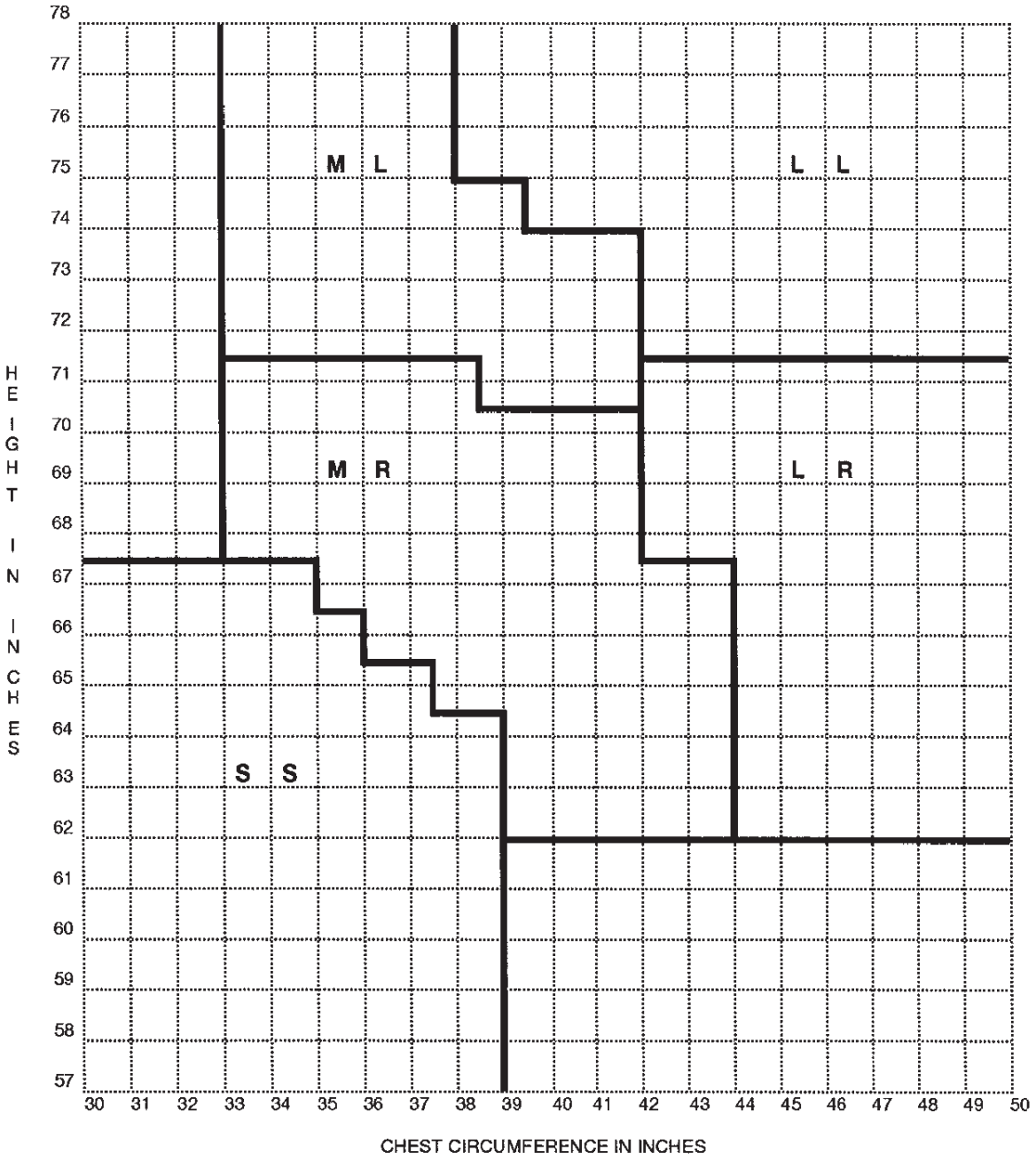

SIZES LR = LARGE REGULAR MR = MEDIUM REGULAR SS = SMALL SHORT
LL = LARGE LONG ML = MEDIUM LONG

CHART IS FOR GUIDANCE ONLY. USE SIZE THAT IS MOST FORM FITTING AND COMFORTABLE.

Figure 470–5–5. ACPG Coat Size Selection Chart

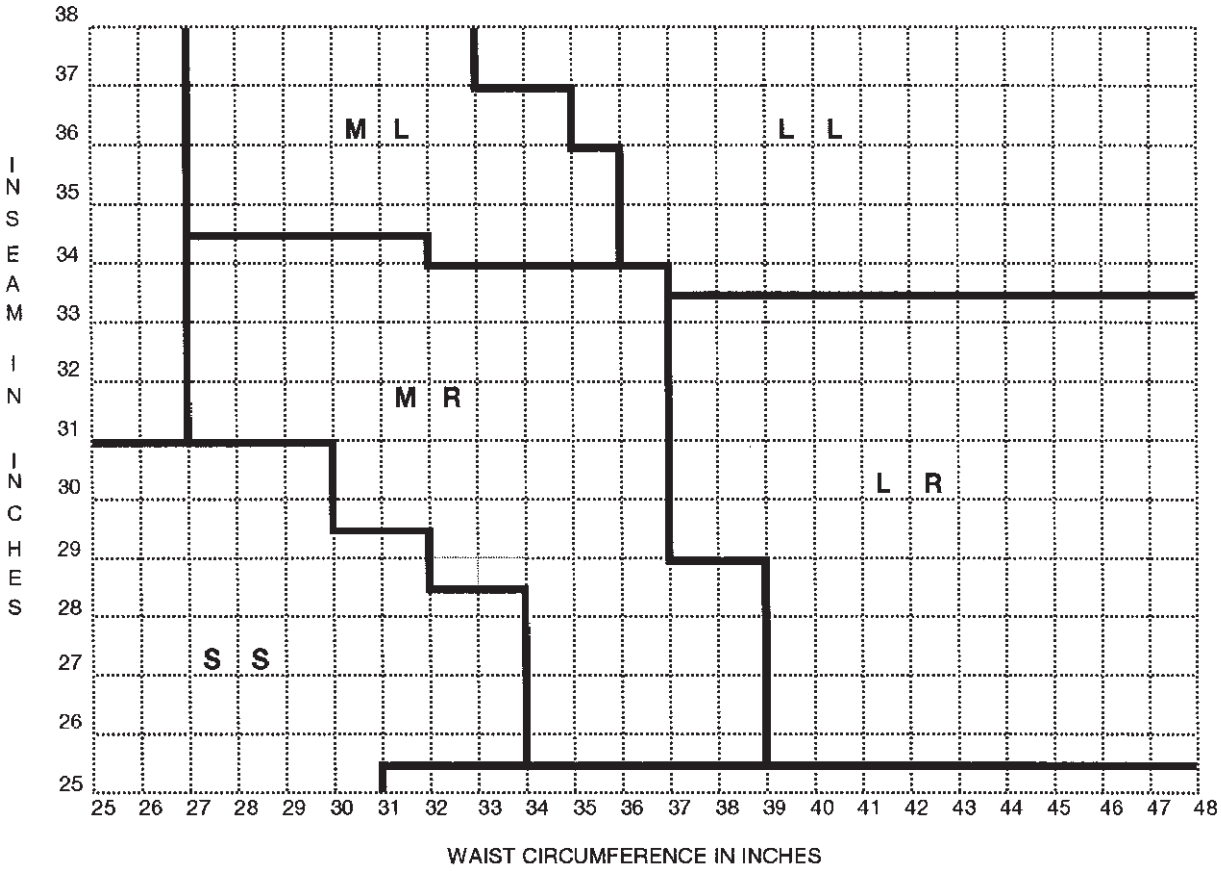

SIZES LR = LARGE REGULAR MR = MEDIUM REGULAR SS = SMALL SHORT
LL = LARGE LONG ML = MEDIUM LONG

CHART IS FOR GUIDANCE ONLY. USE SIZE THAT IS MOST FORM FITTING AND COMFORTABLE.

Figure 470–5–6. ACPG Trouser Size Selection Chart

470–5.3.2.4 Operational Service Life in an Uncontaminated Environment. The use of the ACPG in an uncontaminated environment is subject to the following:

a. Once removed from the original packaging, the ACPG coat and trousers shall be sealed in their reusable plastic storage bags when not worn. The bags protect the garments from shipboard materials that can damage them such as petroleum, oil and lubricant (POL) products and cleaning solvents. When packaging these items into storage bags, care shall be taken to avoid contact with sharp objects that could cause rips or tears. Before placing an uncontaminated ACPG garment into its storage bag, it shall be inspected for the following conditions.

1. Expired ACPG's shall be replaced.

2. ACPG's that have come in contact with POL's shall be replaced.

3. Damaged ACPG's shall be replaced.

4. Wet ACPG's shall not be placed in the storage bags. Air–dry thoroughly prior to stowage.

b. Operational service life in an uncontaminated environment is limited to 45 wear days, if it has been properly stored between uses, within a period of 120 consecutive calendar days after opening the original

packaging. Wear time starts when the ACPG is removed from its original packaging or from the reusable storage bag. Wear time stops when the garment is placed in the reusable storage bag. Each day in which the garment is worn counts as a wear day.

c. Wear time and inspection results shall be recorded for each ACPG in the format provided in Figure 470–5–7. This form can be reproduced locally on 90 lb. paper or heavier stock. The whole form can be printed on one side of 8.5” x 11” stock or it can be printed on 8” x 5” cards with the instructions on the back.

1. Maintain a separate wear time and inspection record for each ACPG item, i.e., one form for each coat and one form for each pair of trousers. The record form for each item shall be kept in the reusable storage bag that comes with the item.

2. When an ACPG item is unpacked from the original factory packaging, the date shall be recorded on the wear time and inspection record and on the garment label.

3. Wear time and inspection results shall be recorded each time the garment is removed from or placed in its resealable bag for use, laundry or periodic inspections.

d. An ACPG shall be removed from operational status if any one of the following limitations applies:

1. 45 wear days have been accumulated in an uncontaminated environment.

2. 120 calendar days have elapsed since opening the original factory sealed packaging.

3. Any of the deficiencies described in subparagraph a above.

470–5.3.2.5 Operational Service Life in a Contaminated Environment. In a contaminated environment, the 24 hour criterion becomes the controlling operational time limit instead of the 45 wear days within 120 calendar days. For example, if the total wear time in an uncontaminated environment is in the 45th day when the environment becomes contaminated, the ACPG may be worn for an additional 24 hours for a total maximum wear time of 46 days. After an APCG is worn in a contaminated environment, it is not reused.

WARNING

Laundering of ACPG’s is **not** a decontamination procedure. It is performed only on uncontaminated garments.

WARNING

Chlorine bleach shall not be used to wash ACPG’s. It compromises their chemical protective capability.

WARNING

ACPG’s shall be tumbled dry at low temperature, 110–120°F, or air dried. Drying at higher temperatures compromises their chemical protective capability.

WARNING

It is essential that each garment is placed back in its own storage bag after being laundered. The ACPG Wear Time and Inspection Record form for each garment stays with its storage bag while the item is being laundered. A laundry mark shall be recorded on this form and placed on each garment label in indelible ink. This prevents mixing up garments with different operational service life expiration dates. To avoid puncturing the fabric, a blunt marker shall be used to affix the laundry mark on the label.

ADVANCED CHEMICAL PROTECTIVE GARMENT (ACPG)
WEAR TIME AND INSPECTION RECORD - UNCONTAMINATED ENVIRONMENT

Check Garment Type: Coat _____ Trousers _____ Size _____ Laundry Mark: _____

Date/Time Unpacked	Laundry Date	Inspection Results After Unpacking	Date/Time Repacked	Inspection Results Before Repacking

INSTRUCTIONS

1. The ACPG is limited to 24 hours of wear in a contaminated environment. DO NOT INSPECT OR REPACK GARMENTS THAT WERE EXPOSED TO CHEMICAL AGENTS.
2. The ACPG is limited to 45 wear days in an uncontaminated environment within 120 consecutive calendar days if the ACPG has been properly stored between uses. See **NSTM Chapter 470**, paragraph 470–5.3.2.4 for guidance on proper storage.
3. The date the garment is initially unpacked from the original factory sealed packaging shall be recorded as the first entry in the first column. Zero cumulative wear days is recorded as the first entry in the last column. This date is also recorded on the garment label in indelible ink. The expiration date of the garment is 120 days after this date unless a total of 45 wear days is accumulated earlier.
4. When an uncontaminated ACPG is repacked, the date and time are recorded in the fourth column. Total wear days is recorded in the last column. The garment is removed from operational service when a total of 45 wear days has been accumulated unless the expiration date is passed first.
5. An uncontaminated ACPG can be laundered up to six times. Record the dates in the second column. Laundry personnel shall ensure that garments with different expiration dates, total wear days or number of times laundered are not mixed up. See **NSTM Chapter 470** paragraph 470–5.3.2.6.
6. Perform an inspection each time this garment is unpacked, repacked or laundered. Record results as SAT or UNSAT and initial. Report UNSAT findings to your supervisor. Check for the following:
   a. Moisture. If wet, air dry before repacking.
   b. POL contamination
   c. Rips, tears or holes
   d. Damage to any fastener or fitting device (draw cord, barrel lock, slide fastener, hook and pile fastener, suspenders, coat retention cord, webbing strip, snap).
7. Obtain a new wear time and inspection record if this one is filled before the garment is retired. The following information shall be transferred to the new record: garment type and size; date and time garment was initially unpacked; previous laundry dates; cumulative wear days.
8. If this ACPG is converted to training use, enter the date in the first column followed by TRAINING USE ONLY. Continue to maintain this record for practice in these procedures.

Figure 470–5–7. Advanced Chemical Protective Garment Wear Time and Inspection Record

NOTE

For best results, all slide fasteners and hook and pile closures on ACPG's should be secured prior to laundering.

470–5.3.2.6 Laundering of ACPG's. Dirt cuts textile fibers and retains moisture from perspiration. This can compromise the protective capability of the ACPG. To prevent this degradation, each garment can be laundered up to six times during the 45 wear–day period of use in an uncontaminated environment. **These procedures are not performed on contaminated garments.** Navy Wash Formula III is used to clean uncontaminated garments in accordance with NAVEDTRA 10176. Formula III is a low temperature wash using detergent and oxygen bleach. The garments are tumbled dry at low temperature (110–120°F) or air dried. There is a label in each garment, both coats and trousers, with numbered spaces for recording the number of times it has been washed. Laundry personnel shall place a check mark in the lowest remaining numbered space in indelible ink prior to washing the garment and shall enter the laundry date on the ACPG Wear Time and Inspection Record, Figure 470–5–7. Laundry personnel shall assign a laundry mark to each garment to facilitate matching it with its storage bag and record of wear days. This mark shall be written on the garment label in indelible ink and recorded on the wear time and inspection record. See **Naval Ships Technical Manual Chapter 655** for more information on laundry equipment and procedures.

WARNING

ACPG's available for operational use shall not be repaired. ACPG's that are damaged while in use in a chemical hazard environment may be temporarily repaired with duct tape **only** in emergencies.

470–5.3.2.7 Repair of ACPG's. Garments that are available for operational use shall not be repaired. Emergency repairs may be performed on ACPG's that are damaged while in use in a chemical hazard environment if it is not possible to change into a new set of overgarments in a safe area. Duct tape shall be used to cover rips and tears in such emergencies.

470–5.3.2.8 ACPG Training Suit. The shipboard allowance of ACPG's includes a quantity of garments for training that is equal to 10 percent of ship's manning. These suits are also available for operational use until the wear time limitations described in paragraph 470–5.3.2.3 are exceeded. Additionally, ACPG's that are removed from service due to any of the limitations described in paragraph 470–5.3.2.4, if in good condition, should be used for training. ACPG's that have been retained for training and are not available for operational use shall be identified as training garments on the inspection forms and shall be marked in a way that indicate that they are to be used only for training. White bands two inches wide painted around the sleeves of the coat and legs of the trousers are recommended. Masking tape can be used in a similar manner. Training garments that have been removed from operational use may be repaired by stitching or duct tape.

470–5.3.2.9 JSLIST Operator's Manual. The ACPG is identical to JSLIST Chemical Protective Overgarment used by the other military services. The Navy uses the ACPG terminology to distinguish this clothing from the Navy's Chemical Protective Overgarment. The **Operator's Manual for Joint Service Lightweight Integrated Suit Technology (JSLIST) Chemical Protective Clothing**, is a joint service publication that provides more detailed information about the configuration, capabilities and limitations of the ACPG. However, some of the other articles of protective clothing discussed in this manual are different from the corresponding items used aboard ship. They are used with the JSLIST by the other services. There are also differences in donning, doffing and maintenance procedures. Wherever conflicts exist on shipboard maintenance and use of the ACPG between the joint technical manual and Navy publications, the Navy directives shall take precedence.

WARNING

When being worn, Chemical Protective Footwear Covers (CPFC's) shall be inspected periodically for holes or punctures. They shall be replaced if damaged. If the CPFC's become contaminated with gasoline, oil, grease or cleaning fluids, they shall be wiped off and air–dried within two minutes.

470–5.3.3 CHEMICAL PROTECTIVE FOOTWEAR COVER (CPFC). The chemical protective footwear covers are worn over the standard work shoes and provide protection against exposure to chemical agents. The CPFC's are loose fitting, impermeable, butyl sheet rubber overshoes with a non-slip, butyl rubber fishtail pattern sole. The CPFC's are approximately 16 inches high with a grommet and lace closure, including five eyelets to allow lacing around the foot. CPFC's can be seen as part of the Chemical Protective Ensemble in Figure 470–5–1. The CPFC's come in two sizes, small and large, and can be worn on either foot. They are issued in a polyethylene bag with two pairs of laces. Replacement laces for the CPFC's can be ordered from the supply system. The NSN for a pair of laces is 8335–01–107–6998. The wearing and donning instructions that are packaged with the CPFC's were developed for Army use and are to be disregarded. The instructions on how to tie them are contained in paragraph 470–5.3.5. In a contaminated environment, the CPFC's provide 24 hours of protection from agent penetration. Once contaminated, the CPFC's, if in good condition, can be decontaminated and reissued. Decon procedures are described in Section 7 of this chapter.

WARNING

When being worn, chemical protective gloves shall be inspected periodically for holes or punctures. They shall be replaced if damaged. If the gloves become contaminated with gasoline, oil, grease or cleaning fluids, they shall be wiped off and air–dried within two minutes.

WARNING

Surgical gloves shall not be used as a substitute for the inner gloves because the material does not provide the required level of chemical protection.

470–5.3.4 GLOVE SET, CHEMICAL PROTECTIVE. The chemical protective glove set is worn to protect against chemical warfare agents (liquids and vapors). The set consists of an outer glove to provide chemical protection and an inner glove to absorb perspiration. The outer gloves are shown as part of the Chemical Protective Ensemble in Figure 470–5–1. The inner glove is very important. It provides tactility to the fingers and hands. The outer five–digit glove is made of 25 mil thick impermeable, black butyl rubber and the inner glove is made of cotton. The glove set is issued in a clear polyethylene bag with an instruction sheet. They come in five sizes, X–small, small, medium, large and X–large. Replacements for the inner glove can be ordered from the supply system. Upon contamination, the glove set provides at least six hours of protection from agent penetration. Gloves in good condition can be decontaminated and reissued. The decontamination procedure is described in Section 7 of this chapter. For rough work, such as line handling, leather gloves should be worn over the chemical protective gloves to prevent tearing. Environmental handgear can be worn over the chemical protective gloves in cold weather. To obtain better tactility with the chemical protective gloves a smaller than normal size may be worn. This will pull the gloves closer to the fingers. Frequent training with the gloves, even if the rest of the Chemical Protective Ensemble is not worn, can markedly decrease the performance degradation.

470–5.3.5 PROCEDURES FOR DONNING THE CPE WHEN USING THE CPO CONFIGURATION. The following are the recommended procedures for donning the chemical protective ensemble:

1. Inspect the garment and record the results on the CPO Wear Time and Inspection Record in accordance with paragraph 470–5.3.1.3. A single form is used for the set, one coat and one pair of trousers. Place the form in the reusable plastic bag for the garment.

2. Don trousers. Tighten waist by using the hook and pile fasteners.

3. Bring suspenders over shoulders and cross them across the chest. Insert straps into belt loops and secure snugly with a bow knot.

4. Don smock.

NOTE

Smock may be donned after Chemical Protective Footwear Covers if operational situation permits.

5. Secure bottom of smock with hook and pile fasteners.

6. Raise trouser legs.

7. Don Chemical Protective Footwear Covers (CPFC). One recommendation for donning the CPFC's is shown in Figure 470–5–8 and described below.

a. Attach the laces (in the center) to the toe loop. Ensure both laces are even. Kneel down and slip CPFC's over conventional footwear. Push heel of foot to the back of the boot (this is important!). Make sure the foot is centered on the rubber sole.

b. Put the laces through the middle eyelets (A & B) from the inside to the outside and pull snug. (Make sure the toe loop is pulled tightly over the top of the shoe.) Cross the laces in front of the boot.

c. Pull laces through each back eyelet (C & D) from the inside to outside. Cross laces over instep and pull snug.

d. Cross excess laces around the ankle and secure with a bow knot in front.

NOTE

If you have small feet and large CPFC's, The CPFC's may stay on better if you go from the front eyelet to the back eyelets (C&D), cross the laces, and then go to the side eyelets (A&B).

e. While kneeling, pull trouser leg down over the CPFC and secure with hook and pile fasteners.

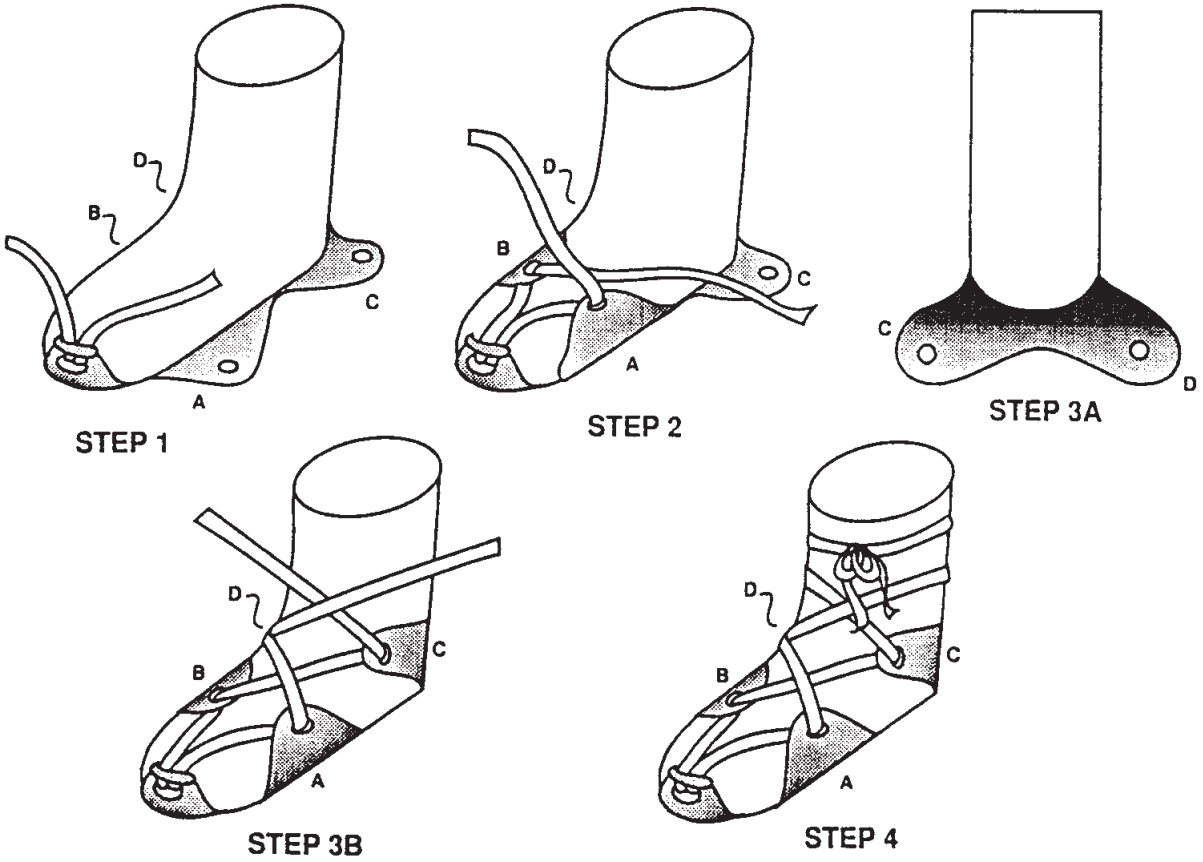

Figure 470–5–8. Lacing Procedures for the Chemical Protective Footwear Cover

8. Don chemical protective mask (see paragraph 470–5.2.3 or mask technical manual)

9. Pull hood over chemical protective mask and secure under the chin with the slide on the draw strings. Have buddy check for a tight hood–to–mask fit under chin.

10. Pull sleeves up to elbow.

11. Don white cotton undergloves and black, butyl rubber chemical protective gloves.

12. Pull sleeves down over rubber gloves, bend arm towards chest, and secure with hook and pile fasteners.

WARNING

Be sure that before entering a contaminated area, you are able to move with relative ease without the CPO binding or pulling the hook and pile fasteners apart.

470–5.3.5.1 A loose fitting CPO provides for greater freedom of movement while minimizing the possibility of separation of the sleeves from the gloves, the trousers from the boots, and the smock from the trousers, all of which could lead to chemical agent exposure. In some situations (e.g., around machinery with exposed moving parts), temporary tightening of loose material of the suit may be desirable. Loose material can be tightened with rubber bands, hook and pile fasteners (provided they are not sewn to the CPO), masking tape etc. Masking tape is recommended since it is readily available and disposable.

470–5.3.6 PROCEDURES FOR DOFFING THE UNCONTAMINATED CPE WHEN USING THE CPO CONFIGURATION. This paragraph provides procedures for doffing and storing uncontaminated CPE's. Procedures for doffing CPE's that have been used in a contaminated environment are provided in Section 7 of this chapter. Uncontaminated CPE's are doffed by reversing the sequence of the donning procedures in paragraph 470–5.3.5. Self and buddy aid items are removed from the CPO smock pocket and stowed in the mask carrier. CPO smocks and trousers are placed in the foil bags and plastic bags for stowage between uncontaminated uses. If they are soaked with perspiration, sea water or rainwater, they shall be dried before being stowed in the bags. Inspect the garment and record the results on the CPO Wear Time and Inspection Record in accordance with paragraph 470–5.3.1.3. Place the form in the reusable plastic bag for the garment.

470–5.3.7 PROCEDURES FOR DONNING THE CPE WHEN USING THE ACPG CONFIGURATION. The following is the recommended procedure for donning the CPE when using the ACPG.

1. Unpack the ACPG coat and trousers. Retain the reusable inner bags for stowage of the garments. Check the garments for damage such as punctures, rips and tears. If any damage is found, exchange the garment for a new one.

2. If either garment is being placed into service for the first time, record the date the item was placed into service in indelible ink on the label. Take care to avoid puncturing the fabric.

3. Inspect each garment and record the results on the ACPG Wear Time and Inspection Record in accordance with paragraph 470–5.3.2.4. A separate form is required for each item, one for the coat and one for the trousers. Place the form in the reusable plastic bag for the garment.

4. Don the trousers and close the slide fastener and the snap at the top of the slide fastener. Adjust the hook and pile fasteners at the waist for a snug fit.

5. Pull the suspenders over the shoulders. Pass the loose ends of the suspenders through the suspender loops on the front of the trousers from inside to outside. Adjust the length of the suspenders and secure them with the hook and pile fasteners.

6. Don the coat and close the slide fastener up as far as the chest. Pull the bottom of the coat down over the ACPG trousers.

7. Pull the ends of the elastic draw string at the waist through the front of the coat to achieve a secure fit and tie the ends in a bow in front. It is very important to use a bow knot because it must be untied quickly when the ship goes to MOPP4. See step n.

8. Attach a band of M9 paper to the sleeves of selected topside personnel in accordance with paragraph 470–4.4.2.2.

9. Don Chemical Protective Footwear Covers (CPFC's). One recommendation for donning the CPFC's is shown in Figure 470–5–8 and described below.

a. Attach the laces (in the center) to the toe loop. Ensure both laces are even. Kneel down and slip CPFC's over conventional footwear. Push heel of foot to the back of the boot (this is important!). Make sure the foot is centered on the rubber sole.

b. Put the laces through the middle eyelets (A & B) from the inside to the outside and pull snug. (Make sure the toe loop is pulled tightly over the top of the shoe.) Cross the laces in front of the boot.

c. Pull laces through each back eyelet (C & D) from the inside to outside. Cross laces over instep and pull snug.

d. Cross excess laces around the ankle and secure with a bow knot in front.

NOTE

If you have small feet and large CPFC's, The CPFC's may stay on better if you go from the front eyelet to the back eyelets (C&D), cross the laces, and then go to the side eyelets (A&B).

e. While kneeling, pull trouser leg down over the CPFC and secure with hook and pile fasteners.

10. Don the chemical protective mask (see mask technical manual or paragraph 470–5.2.3). Ensure there is a good seal.

11. Pull hood of coat over chemical protective mask.

12. Close the slide fastener on the front of the coat completely and secure the flap over it as far as the top of the slide fastener with the hook and pile fastener.

13. Place the edge of the garment hood around the edge of the mask and secure the flap above the top of the slide fastener with the hook and pile fastener.

14. Pull the elastic cord around the edge of the garment hood tight around the edge of the mask and slide the barrel locks up the cord to the garment hood to keep the cord in place. Snap the barrel locks together under the chin (assistance may be required).

15. Have a buddy check the hood and mask to make sure that the hood is positioned properly and that no skin is exposed.

16. When MOPP 4 is set, untie the bow in the elastic draw string at the waist. Grasp the elastic loop at the bottom edge on the back of the coat by bending over and reaching between the legs. Pull on the loop so the bottom of the coat fits snugly over the trousers. Bring the loop forward between the legs. Place the loop over the webbing strip at the bottom edge on the front of the coat. Fasten the snap on the webbing strip to keep the loop in place.

17. Pull the ACPG coat sleeves up to the elbow.

18. Don the white cotton inner gloves, then the black butyl rubber outer gloves.

19. Pull the ACPG coat sleeves down over the chemical protective gloves and secure the hook and pile fasteners around the wrists.

470–5.3.8 PROCEDURES FOR DOFFING THE UNCONTAMINATED CPE WHEN USING THE ACPG CONFIGURATION.

1. Remove chemical protective gloves.

2. Remove garment hood by unfastening barrel locks, loosening elasticized cord around edge of hood and unfastening hook and pile fastener.

3. Remove mask.

4. Unfasten hook and pile fastener on sleeves of garment.

5. Unfasten hook and pile fastener fasteners on legs of garment.

6. Remove chemical protective footwear covers.

7. If standing down from MOPP 4, unfasten snap on webbing strip at bottom of garment jacket.

8. Unfasten hook and pile fastener and front slide fastener on garment jacket.

9. Remove garment jacket.

10. Unfasten suspender buckles and hook and pile fasteners at waist of ACPG trousers. Unfasten trouser snaps, open slide fastener and remove garment trousers.

11. Repack garment in reusable ziplock bag.

12. Record wear time in accordance with paragraph 470–5.3.2.4. Place wear record inside reusable bag and close bag seal on bag.

470–5.3.9 WET WEATHER CLOTHING. This ensemble, made of chloroprene coated nylon, is resistant to liquid and aerosol chemical agents.

470–5.3.9.1 Parka. The parka is a jacket style and has an attached hood, an adjustable fastener at the neck closure, take–up straps at the sides of the hood, and a flexible visor. The parka also has two front patch pockets with flaps, a slide fastener front closure with moisture barrier flaps, an adjustable drawcord at the bottom, and adjustable fasteners at the sleeve bottoms.

470–5.3.9.2 Overalls. The overalls have a bib front and high back style, a patch pocket with a flap located on the left front, and a gusset type closure located on the right side. Each hemmed leg bottom has a leg tab for adjustment.

470–5.3.9.3 Use of Wet Weather Clothing with the CPE. The wet weather clothing ensemble can be worn over the ACPG or CPO to provide extra protection from falling or wind–driven liquid chemical agent droplets and solid particulates, and to prevent the overgarment from getting soaked by the water washdown system or sea spray. For maximum protection, openings should be sealed with tape. Wet weather clothing will protect against liquid and aerosol chemical agents for six hours in a contaminated environment. It can be decontaminated and reissued, if in good condition. However, wearing wet weather clothing dramatically increases heat stress. This factor should be weighed against the extra protection afforded by the wet weather clothing. Wearing wet weather clothing does **not** add to the six hour wear time of the CPO or the 24 hour wear time of the ACPG in a contaminated environment.

470–5.4 IMPACT OF WEARING CHEMICAL PROTECTIVE CLOTHING AND EQUIPMENT

470–5.4.1 IMPACTS ON SHIPBOARD OPERATIONS AND FUNCTIONS. Wearing chemical protective clothing or equipment will affect the way personnel conduct their military tasks and other functions. Following are some of the impacts:

a. Drinking. Consumption of fluids is extremely important in warm or hot environments while wearing protective clothing. Personnel wearing the the MCU–2/P series masks can use the mask's drink tube for drinking from the canteen with the special M1 adapter cap.

b. Eating. Eating should be deferred until the ship is in an uncontaminated environment. All food that has possibly been exposed to contaminants should be discarded. If eating is absolutely necessary, it must be done in an uncontaminated portion of the ship, preferably inside a CPS total protection zone.

c. Elimination of Body Waste. An uncontaminated area must be available to remove the CPO for elimination of body wastes. Uncontaminated zones within the ship are suitable. Personnel must be free of contamination before entering these areas. Personnel can eliminate body waste while wearing the CPO. The overgarment and waste should be disposed of in accordance with doffing and decontamination procedures.

d. Sleeping or Convalescing. Personnel should sleep or convalesce in protective clothing and equipment unless a chemically protected and uncontaminated area is available.

e. Personal Hygiene. Personnel must be in an uncontaminated, protected area of the ship to wash, change clothes and shave. **A CLOSE SHAVE IS ESSENTIAL TO ENSURE A GOOD SEAL FOR THE CHEMICAL PROTECTIVE MASK.**

WARNING

Wax crayons or badges that puncture the CPO or ACPG fabric shall not be used for identification.

f. Personnel Identification. Wearing a mask and CPO makes rapid identification of personnel impossible. Stenciled helmets, brassards attached to the arm with rubber bands, or masking tape with appropriate identification may help solve this problem.

470–5.4.2 COMPATIBILITY WITH OTHER PROTECTIVE CLOTHING. When a shipboard emergency occurs in a chemical environment, incompatible protection requirements may result. Given the number and variety of equipment types that shipboard personnel wear, carry, or use, and the evolving nature of shipboard CBR–D, some near–term incompatibilities are inevitable. Some situations will require risk management by on–scene team leaders, i.e., assessment of the relative hazards and priority prosecution of the most serious threat. For example, due to the size of the flak vest it must be worn over the CPO or ACPG. When wearing the CPE, personnel should don the flak vest only when considered absolutely necessary by the on–scene leaders. They should take into account that the flak vest cannot be decontaminated and that it adds significantly to heat stress. As some equipment cannot be decontaminated, personnel required to go topside in a contaminated environment, such as survey teams and decontamination teams, should only carry and wear equipment essential to their mission. Mask carriers should be left inside the ship. In general, when faced with conflicting alternatives, prosecution of the most serious threat to the ship's mission takes precedence.

CAUTION

Protective clothing that is worn over the CPE may be required in a larger size than the wearer would normally use.

470–5.4.2.1 Specialized Protective Clothing. Specialized protective clothing that is required for emergencies such as fire fighting or nuclear weapon accident–incident can be used instead of chemical protective clothing as

long as eye–respiratory protection is part of the ensemble. Care must be taken when changing canisters on breathing apparatus to avoid breathing chemical agent vapor or aerosol. Specialized protective clothing probably provides some protection against a contact percutaneous hazard. However, if the clothing has not been tested for this, and if the wearer is exposed to a contact hazard, the specialized garments must be removed and the individual must go through personnel decontamination procedures as soon as the situation permits.

470–5.4.2.2 Flight Deck Clothing. All flight deck clothing (Mk1 vest, cranials, etc.) is worn over the CPE.

470–5.4.3 PERSONNEL PERFORMANCE DEGRADATION. Wearing the chemical protective ensemble (CPE) will degrade personnel performance in a number of ways, and different types of tasks will be degraded differently. The major contributing factors are the heat burden imposed by the CPE, the cumbersome nature of the clothing and mask, and the psychological stress. Physical and mental endurance, the ability to think and reason (cognitive performance), ability to concentrate, manual dexterity, gross motor skills, fine motor skills, tactile sensitivity, visual acuity and voice communication can all be degraded. The result could be one or all of the following:

a. A reduction in the length of time a person can work at a particular task between rest periods (stay time). This is primarily the result of heat build–up due to the clothing and mask, fatigue from mask breathing resistance and psychological stress.

b. An increase in the time required to do most tasks by a factor of approximately 1.2 to 1.6. Task performance is degraded even without heat stress due to the cumbersome nature of the protective clothing and mask. It may be necessary to adjust work–rest cycles to prevent heat illness. A ratio of work time to rest time of 1:4 or 1:5 may be required, which would drastically increase the time or number of personnel required to complete a task.

c. An increase in the number of errors or mistakes.

NOTE

Frequent training while wearing the CPE can reduce susceptibility to heat stress and improve task performance. Hydration (drinking large amounts of water) prior to and after donning the CPE enhances the wearer's endurance in the ensemble.

470–5.4.4 SELF AND BUDDY AID ITEMS ISSUED FOR INDIVIDUAL PROTECTION. Several items are mentioned in paragraph 470–5.3.1.1 that are issued to individuals and are kept in the pocket of the CPO or ACPG. Atropine auto injectors, 2PAM Chloride auto–injectors, and NAPP are medical items. Their use is discussed in NAVMED P–5041. The M291 Skin Decontamination Kit and its use are described in Section 7 of this chapter. After these items are issued to individuals, they are stowed in the mask carrier until the CPO smock or the ACPG coat is donned. Then they are placed in the pocket of the smock or coat.

SECTION 6.
COLLECTIVE PROTECTION: VENTILATION SYSTEM CAPABILITY AND ACCESS CONTROL IN A CB HAZARD ENVIRONMENT

470–6.1 VENTILATION FUNCTIONS AND SYSTEMS

470–6.1.1 FUNCTIONS. All Navy ships except submarines are ventilated with air that is continuously replenished to some degree from outside the ship. Heating, Ventilation and Air Conditioning (HVAC) systems bring in fresh air, filter it, condition the air by cooling or heating it and removing moisture, circulate it inside the ship and, finally, remove stale air. When a ship is enveloped in a toxic environment due to the release of a chemical or biological agent, it is desirable to deny the entry of the agent into the interior of the ship. If a completely safe atmosphere cannot be maintained inside the ship, the next best situation is to permit a mask–only posture.

470–6.1.1.1 Filtration Capability. One of the key functions in minimizing the entry of contamination is filtration of the incoming air supply. To completely remove chemical and biological agents, a filtration system needs the capability to deal with chemical agents in vapor, liquid aerosol and solid aerosol form and with wet and dry biological aerosols.

470–6.1.1.2 Minimizing the Entry of Contaminants. The other key function is restricting the entry of unfiltered air into the ship through accesses and structural defects. Tests have shown that a Navy ship cannot be made completely airtight. Leaks develop in the superstructure and around improperly sealed access fittings, and the problem worsens as the ship ages.

470–6.1.2 VENTILATION SYSTEMS. There are two types of ventilation systems on surface ships, the conventional ventilation system and the Collective Protection System (CPS).

470–6.1.2.1 Conventional Ventilation System. In a conventional ventilation system, supply fans bring in air from the weather and exhaust fans remove stale air. The only way to restrict the entry of contaminated air is to secure as many closures and shut down as much ventilation as possible before the ship is enveloped in a toxic atmosphere. These actions slow the intrusion of chemical and biological agents but do not completely stop it. Protective masks are required in any CB hazard environment and protective clothing is needed if an airborne percutaneous CB hazard is present.

470–6.1.2.2 Collective Protection System (CPS). A collective protection system uses fans for the same purposes as a conventional HVAC system. It also has CBR filters that have the capability to remove CBR agents in any form. CPS provides two levels of protection. In Total Protection (TP) zones, all CBR contaminants in any physical state are filtered from the incoming air supply and a slight positive pressure is maintained to keep airborne contamination from entering by other routes. Any leakage of air at the zone boundaries is from the inside out. The air pressure inside a TP zone is maintained slightly above atmospheric with high pressure fans that supply air to the zone, with devices that control the flow of exhaust air from the zone and with air locks that prevent excessive pressure loss when someone enters or exits the zone. Total Protection (TP) zones provide a toxic free environment where it is not necessary to wear protective clothing or masks. Total protection may not be affordable in compartments with extremely high air flow requirements, such as machinery spaces. CPS provides a lower level of safety for these areas called Limited Protection (LP). Chemical and biological aerosols are removed from the incoming air supply to LP zones by High Efficiency Particulate Air (HEPA) filters. The standard supply fans do not create a positive pressure and the HEPA filters do not entrap chemical agent vapor. A protective mask is required for protection from chemical agent vapor and the full CPE is needed for a percutaneous chemical vapor hazard.

470–6.1.2.3 CPS Protection Levels for New Construction Ships. The amount of CPS coverage designed into a new construction ship is specified by the Chief of Naval Operations (CNO). The extent of CPS coverage is related to the ship's mission, operational requirements and the cost of the installation. Three levels of CPS protection

(Levels I, II and III) have been defined for new construction ships. These levels of protection are defined broadly. It is not unusual to find differences in the level of CPS coverage on different flights of the same class or even between individual ships of a class. There are areas on some CPS ships that are served by conventional ventilation. Typical coverage and zoning for a Level III ship design are shown in Figure 470–6–1.

a. Level I – Shelter Envelope – An area of TP coverage that provides protection for berthing, messing, sanitary, and battle dressing facilities for 40 percent of the crew. This concept is sometimes called a safe haven.

b. Level II – Minimum Operational Envelope – An expanded area of TP coverage that includes the Level I shelter envelope and key operational functions that can be economically integrated into the ship design. The emphasis is on surprise attack survival.

c. Level III – Maximum Operational Envelope – Sufficient TP coverage of the ship for mission requirements except for flight deck and well deck operations.

470–6.1.2.4 Selected Area Collective Protection System (SACPS). A backfit version, the Selected Area Collective Protection System (SACPS), has been developed for ships that were built before CPS was introduced. CPS coverage for a small number of selected vital operational spaces and safe havens can be backfitted onto existing ships. SACPS fans and CBR filters are added. Incoming air is filtered and pressurized, but at a lower positive pressure than new construction CPS. Recirculation systems that were already installed within the SACPS zones are retained. The system is generally used where a more extensive CPS is impractical or too costly to backfit.

470–6.1.2.5 References on Ventilation System Configuration and Capabilities. General information on HVAC systems and components is provided in **NSTM Chapter 510, Heating, Ventilating and Air Conditioning Systems for Surface Ships**. Generic information on CPS configuration and components is available in a series of technical manuals listed in Appendix B. Information on the HVAC system for an individual ship is provided in selected records that are maintained for each ship, including the Ship Information Book (SIB), Damage Control (DC) Book, Damage Control Plates and HVAC systems manual.

470–6.2 CONVENTIONAL VENTILATION SYSTEM

470–6.2.1 CONVENTIONAL VENTILATION SYSTEM OPERATION IN A CB HAZARD ENVIRONMENT. A conventional ventilation system has no capability to create positive pressure and no CB filtration capacity. At best, it can permit a mask–only condition. This is adequate for nonpercutaneous chemical

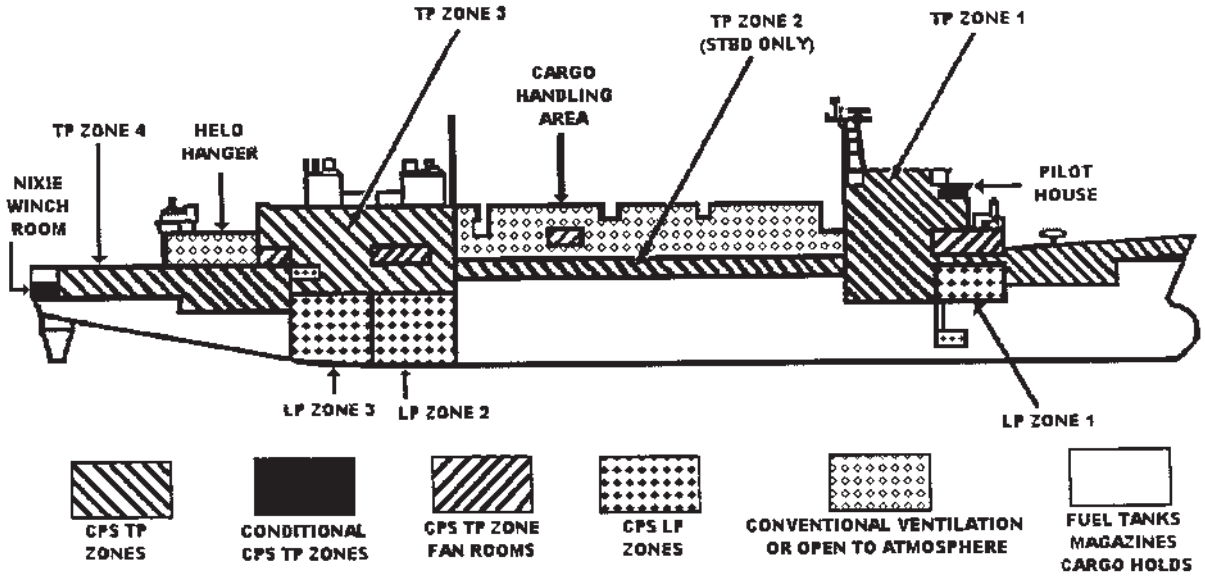

Figure 470–6–1. Typical Coverage and Zoning for a Level III Ship Design

agent hazards and nearly all biological agents. However, if conditions exist that could produce a percutaneous chemical vapor hazard, a mask–only posture may not be sustainable for very long. In this case, the objective is to permit a mask–only posture until it can be determined if a higher MOPP level is required to protect the crew from a percutaneous vapor hazard. The response to a nonpercutaneous agent is quite different from dealing with an agent that can produce a percutaneous vapor hazard.

470–6.2.1.1 Minimizing the Entry of Airborne Contamination with a Conventional Ventilation System. Securing closures and ventilation systems is the only means available to slow the entry of airborne contaminants into compartments with conventional ventilation systems. When material condition ZEBRA is set, most accesses to the weather are closed and some conventional ventilation systems are secured. If Circle WILLIAM fittings are secured as well, the rest of the conventional ventilation fans are shut off and dampers in the ventilation ducting, if installed, are closed. These measures slow the infiltration of chemical and biological agents into the ship but do not stop it. Contaminated air gradually diffuses into the interior of the ship. Further, there are unique risks in the machinery spaces in a CB hazard environment.

a. Boilers, diesels and gas turbines require combustion air regardless of whether the surrounding atmosphere is toxic and there could be some leakage from their casings into the machinery room. Therefore, even if machinery space ventilation is secured, intrusion of toxic vapors and aerosols in this manner is possible.

b. Machinery space ventilation is designed with excess exhaust capability. More air is removed by the exhaust fans than is brought in by the supply fans to allow for expansion due to heat and leaks from steam equipment. Without this feature, hot air could be forced into other parts of the ship, making air conditioning more difficult. If negative pressure develops in a machinery space, make–up air enters as needed via natural supply ducts that are open to the weather. Contaminated air from the outside of the ship can be drawn into machinery spaces along with the make–up air. Even if the ventilation is not operating, contamination can enter by this route by diffusion.

470–6.2.1.2 Conventional Ventilation System Operation in a Nonprecutaneous Hazard Environment. Conventional ventilation need not be secured to maintain a mask–only posture. The hazard from a single attack with a nonpersistent agent does not last long. The primary vapor from blood agents, choking agents and other nonpersistent chemicals dissipates quickly and no contamination is left behind. There is no percutaneous vapor hazard. The ship may be contaminated before the presence of a nonpercutaneous vapor hazard is detected and there will be some infiltration through structural leaks anyway. Thus, there is probably not much to be gained from securing ventilation in this situation. Purging is likely to be accomplished most efficiently by leaving the ventilation on rather than securing it and waiting for confirmation that the ship has reached a clean atmosphere. Whether the ventilation is secured or not, the need to reach a clean atmosphere and conduct a purge remains a high priority, followed immediately by a post–purge survey as described in paragraph 470–6.2.2.3. Then, it is very important to execute the steps described in paragraph 470–4.4.7.1 or 470–4.4.7.2 before unmasking.

470–6.2.1.3 Conventional Ventilation System Operation in a Percutaneous Vapor Hazard Environment. If the ship is attacked with a nerve or blister agent, there is a possibility that a percutaneous vapor hazard can develop inside the ship. The existence of such a hazard is associated with the deposition of liquid agent on the ship's weather surfaces and the development of secondary vapor. In most tactical situations, a ship should be able to get clear of the primary vapor fairly rapidly and purge the interior. However, offgassing from liquid agent deposited on the ship may maintain a sufficient vapor concentration in some compartments to pose a skin hazard to unprotected personnel within minutes. The recommended approach is to secure conventional ventilation and, if possible, ZEBRA and Circle WILLIAM fittings, and then determine if liquid agent has been deposited on the ship. If the answer is no, purge the air inside the ship as soon as the ship is in a clean atmosphere. If there is liquid agent present on topside surfaces, don protective clothing before restarting ventilation. It may be difficult to shut down ventilation for more than a few minutes. In warm weather, the heat load builds up quickly with ventilation secured, especially in machinery spaces. This can subject watch standers to heat stress and equipment to overheating. Wearing the CPE in warm weather, even if the ventilation is in operation, is also difficult. Either of these options would have a negative impact on operational capability. Therefore, see paragraphs 470–2.3.3.3 and 470–8.2.4, which discuss risk factors that may be taken into consideration in balancing the need for protection in this situation with the need to preserve mission capability for current operations.

470–6.2.1.4 Timing of Securing Conventional Ventilation in a Percutaneous Vapor Hazard Environment. If ventilation is not secured before the arrival of agent, securing ventilation and closing Zebra and Circle WILLIAM fittings may trap agent vapor inside the ship. A relatively low concentration of agent, if maintained long enough, can result in unprotected personnel absorbing a harmful percutaneous dose. Even if the ship is already in material condition ZEBRA, it takes several minutes to close all Circle WILLIAM fittings, but the forced movement of air by the fans can be stopped very quickly. On most ships, the fans can be secured from central locations such as the DC console in the Central Control Station, electrical switchboards or electrical load centers. When a CB threat exists, watch standers at these locations shall be prepared to secure all ventilation fans with very little warning. Closing of open accesses and fittings shall begin simultaneously with stopping the fans and proceed until completed.

470–6.2.1.5 Recirculation System Operation to Reduce Heat Stress in a Percutaneous Hazard Environment. Recirculation systems serve air conditioned spaces. If the fans that supply replenishment air to these spaces are secured before the ship enters a chemical hazard environment and if there is no evidence of liquid agent deposition on weather surfaces, it is possible to restart the recirculation fans and retain the benefits of air conditioning. Personnel in these spaces shall wear eye–respiratory protection and the spaces shall be monitored for intrusion of chemical agents that can create a percutaneous vapor hazard.

470–6.2.2 PURGING PROCEDURES. When a ship with one or more conventional ventilation zones or CPS LP zones has been enveloped in a toxic atmosphere, it is likely that the some toxic vapor has diffused into the ship even if supply and exhaust fans were secured. When the ship is in a clean atmosphere, the ship can relax closures to the maximum extent possible and operate its conventional ventilation systems at maximum rate to purge the interior. The percentage of toxic vapor removed based on the number of air changes that have taken place is shown in Table 470–6–1. The time required to exchange one volume of air in each compartment can be determined from the ventilation volume in the Ship's Information Book or from the HVAC technical manuals that have been issued for certain classes of ships. Six air changes should be achieved in all compartments if possible to reduce vapor or aerosol concentrations to negligible levels.

NOTE

Purge procedures apply not only to spaces served by conventional ventilation systems, but also to CPS TP and LP zones that become contaminated.

470–6.2.2.1 Example of Calculating Purge Time. To find the time it takes for one air exchange in a given compartment, divide the volume of the compartment by the fresh air ventilation rate. If the compartment has two supply terminals and each provides fresh air at a rate of 400 cubic feet per minute (cfm), the ventilation rate is 400+400=800 cfm. If the dimensions of the compartment are 8 ft. by 10 ft. by 20 ft., then the volume is the product 8' x 10' x 20' = 1600 cu. ft. To find the time required for one air exchange, the calculation is 1600 cu. ft./800 cfm=2 minutes. Using Table 470–6–1, to get rid of 99.9 percent of any toxic vapor or aerosol in the compartment takes six air changes. In this case, 6 x 2 minutes = 12 minutes are required.

Table 470–6–1. ESTIMATED PERCENTAGE OF AGENT REMOVED BY FRESH AIR CHANGES

Number of Air Changes	Percentage of Agent Removed
1	65
2	87
3	95.5
4	98.3
5	99.8
6	99.9

470–6.2.2.2 Purging a Compartment Served by a Recirculation System. In a compartment with a recirculation system, the basis for the purge time calculation is the rate at which replenishment air is supplied. If the fresh air supply to the recirculation system was secured before the ship was enveloped in the toxic atmosphere, the amount of toxic vapor or aerosol in the space may be very small, but it takes longer to complete the purge than it would based on total air flow.

470–6.2.2.3 Post-Purge Survey and Unmasking Procedure. After the purge procedure is completed, conduct a survey for interior agent vapors or aerosols before unmasking. Keep in mind that the vapors of many chemical agents are heavier than air and they may collect in low spots and poorly ventilated areas, especially those served by natural (unforced) ventilation. Worst case areas shall be identified in advance for testing after purging. Repeat the purge cycle and the survey if necessary until there is no indication of the presence of chemical agents. Then conduct unmasking in accordance with paragraph 470–4.4.7.1 or 470–4.4.7.2.

470–6.3 NEW CONSTRUCTION CPS TOTAL PROTECTION (TP) ZONES

470–6.3.1 TP ZONE DESIGN. Total Protection zones are referred to as **pressure zones**. On ships in which the CPS was installed during construction, positive pressure in TP zones is maintained at 2.0 $\pm$ 0.5 inches water gauge (wg). CPS fans are designed to operate continuously in all material conditions of readiness. Their damage control classification is WILLIAM, not Circle WILLIAM. The HVAC system in a TP zone is designed for full time pressurized operation. Operating the zone unpressurized will not harm personnel or equipment but normal airflow patterns may be disrupted. Heating or cooling may be diverted from the areas for which it was intended. Drafts may be created as air rushes toward openings. Most important, CBR protection is compromised. Zone pressure can be restored and stabilized within two minutes after all accesses and dampers are realigned for pressurized operation.

470–6.3.1.1 Zone Boundaries. The ventilation system provides a route for the spread of fire and smoke from one compartment to another. In order to limit the spread of fire in this manner, shipboard ventilation systems are designed on a firezone basis. To keep smoke and flames from traveling throughout the ship in the ventilation ducting, no system can serve more than one fire zone. Chemical and biological agents can travel through these channels also. Thus, use of firezone bulkheads as pressure zone boundaries is a major consideration in selecting TP zone locations. Pressure zone boundaries are designed to coincide with the firezone boundaries whenever possible. Pressure zone boundaries are color coded in blue on DC Plates number two and three for some ship classes.

470–6.3.1.2 Zone Integrity. In order to maintain TP zone integrity, the boundaries are designed to be a minimum of airtight (AT). This does not mean that there is **no** leakage. The system design makes allowance for some leakage. However, leakage must be kept to a minimum. Proper maintenance of the boundary, including doors, hatches, scuttles, drainage traps, deck penetrations and bulkhead penetrations is necessary to maintain CPS zone integrity. If there is too much leakage of air from a pressure zone, the design positive pressure cannot be maintained.

470–6.3.1.3 TP Zone Access. Accesses to a TP zone are designed to maintain zone pressure. Air locks and pressure locks are small compartments with two doors, one into a TP zone and one to the weather or into an unpressurized part of the ship. Only one door is operated at a time to avoid the loss of the positive pressure in the TP zone. Air locks also have air sweeps that purge vapor contamination from the lock before the door to the TP zone is opened. Additional information on the design and operation of air locks and pressure locks is provided in paragraph 470–6.7.1 and its subordinate paragraphs. The other way to enter a pressure zone is through a CPS decontamination station. The standard design is a four–compartment layout adjacent to the pressure zone that provides a place for contaminated personnel to remove their clothing and cleanse their bodies. An air sweep through the four chambers purges vapor contamination and equalizes the pressure so individuals can enter the decon station from the weather at one end and enter the TP zone at the other. Additional information on the design and operation of a CPS decon station is provided in paragraph 470–6.7.1.6.

470–6.3.1.4 TP Zone Operating Modes. The design intent of the shipboard CPS is for TP zones to be operated in the **pressurized mode** at all times, regardless of the level of the CBR threat. However, ships with

three–position exhaust dampers installed have the option to operate in the **unpressurized mode** at the discretion of the Commanding Officer. See paragraph 470–6.3.2.3 for a description of the settings on the three–position damper.

470–6.3.1.5 Conditional Spaces. It may be necessary to open some compartments in a TP zone to the weather for operational reasons. Examples are the pilot house and hoist rooms for ASW equipment, such as NIXIE and TACTASS. Conditional protection is provided to such compartments, which means they can be isolated if necessary to protect the rest of the zone from contamination. This is accomplished by securing closures in the ventilation ducting serving these spaces. On some ships, they are called Optional Total Protection (OTP) zones.

470–6.3.1.6 Compressed Air Service in TP Zones. Solid, liquid and gaseous contaminants are filtered from compressed air supplied to TP zones. The incoming air passes through a CBR filter before it enters the compressor. This applies to both high pressure and low pressure systems regardless of whether the compressor is in the TP zone or elsewhere. All the air provided by a compressor that serves a TP zone is filtered, including that going to other parts of the ship that are outside of pressure zones.

470–6.3.2 TP ZONE COMPONENTS. A number of standard ventilation system components are used in collective protection systems, including preheaters, prefilters, humidistats, roughing filters, cooling coils and differential pressure gauges. See **NSTM Chapter 510, Heating, Ventilating and Air Conditioning Systems for Surface Ships**, for additional information on these items. CPS components are discussed in the following paragraphs and in SS200–AF–MMM–010, **Technical Manual for Navy Shipboard Collective Protection System (CPS) – System Description, Operation and Maintenance**. Both standard ventilation components and unique CPS components are shown in Figure 470–6–2.

470–6.3.2.1 CBR Filter System. Supply air for TP zones is drawn through CBR filter modules capable of removing solid, liquid and gaseous contaminants. Each filter module contains a prefilter and a CBR filter set. The prefilter captures coarse particles, extending the life of the CBR filter set. In the CBR filter set, a High Efficiency Particulate Air (HEPA) filter removes solid particles and liquid droplets from the airstream, including chemical and biological aerosols. A charcoal filter removes chemical agent vapors. Three modules are mounted in a housing. Each housing has a rated airflow capacity of 600 cfm. The number of housings in a system depends on the supply airflow requirements of the TP zone. For information on operation and maintenance, see SS200–AG–MMM–010, **Technical Manual for Navy Shipboard Collective Protection System (CPS) – Chemical, Biological and Radiological (CBR) Filter System**.

470–6.3.2.2 TP Zone Supply and Exhaust Fans. High pressure vaneaxial fans are used in the supply side of the system to overcome the pressure drop across the CBR filters and to provide the desired positive pressure inside TP zones. There may be more than one supply fan in a TP zone. Standard centrifugal exhaust fans remove stale air from the TP zone and discharge it to the weather. On most ship classes with CPS, there is one exhaust fan for each supply fan in a zone. Exhaust fans are sized to discharge air at a rate that maintains positive pressure in the TP zone while allowing for leakage and designed losses due to air lock operation. There is an electrical interlock between each exhaust fan and its companion supply fan that prevents the exhaust fan from operating if the supply fan fails. This helps to prevent a low or negative pressure from developing in the TP zone. Also, there is a damper downstream of each supply and exhaust fan that closes the opening to the weather and isolates the fan when it is secured. DDG's have sets of two parallel supply fans that are matched with a single exhaust fan. If one of the supply fans fails, the interlock stops the exhaust fan and secures the damper on the supply fan. If the other supply fan fails also, the interlock secures the dampers on both the exhaust fan and the second supply fan.

470–6.3.2.3 Three–Position Exhaust Damper. The exhaust dampers on some ships are three–position exhaust dampers that can be adjusted to help maintain desired pressurization in TP zones. The damper is manually operated. It is placed in the fully open position when zone pressurization is not required. The intermediate position (partially open) is the normal operating position when the zone is pressurized. The closed position is used in emergencies to help maintain positive pressure. Since the ventilation system in the zone is designed for pressurized operation, placing the damper in this position may disrupt the normal pattern of airflow. Air conditioning may be diverted from areas for which it is intended and odors may accumulate. These devices are not installed on DDG's and some LSD's and LHD's.

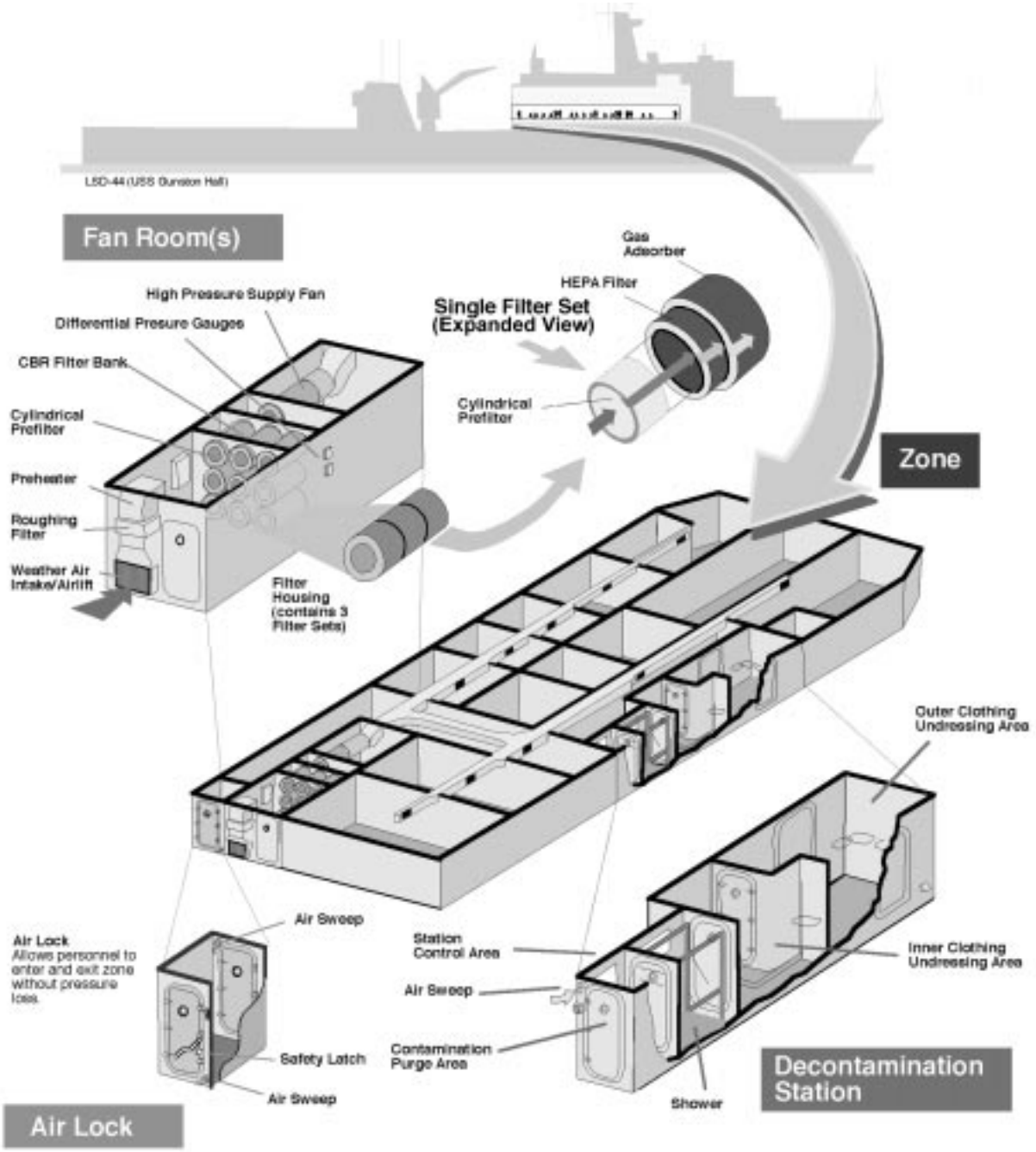

Figure 470–6–2. Typical CPS Total Protection (TP) Zone

470–6.3.2.4 Pressure Control Valve (PCV). Pressure Control Valves (PCV's) prevent excessive pressurization of TP zones. A sufficient number of PCV's is installed to prevent the pressure in each pressure zone from exceeding the desired range. PCV's are closed until zone pressure rises to 2.0±0.2 inches wg. They continue to open as the pressure in the zone increases until they are fully open. When the pressure starts to decrease, PCV's begin to close. At 2.0±0.2 inches wg, they are fully closed. For information on operation and maintenance, see SS200–AJ–MMM–010, **Technical Manual for Navy Shipboard Collective Protection System (CPS) – Pressure Control Valve, Operation and Maintenance**.

470–6.3.2.5 CPS Alarm System. A master panel in DC Central shows the status of each CPS TP zone based on measurements from a zone sensor box with one or more static air probes. At or above 1.5 inches wg a green light indicates that the zone is pressurized. A yellow warning light means that pressure has dropped to between 1.5 inches and 0.4 inches wg. A red light means that zone pressure has dropped below 0.4 inches wg. Some ships have an audible alarm upgrade to the master panel that sounds when the pressure falls below 0.4 inches wg. A slave panel on the bridge has one indicator light for each TP zone that is illuminated only when the pressure falls below 0.4 inches wg. The CPS Alarm on some ships is incorporated into the damage control alarm system at the Central Control Station. A message describing the alarm condition appears on a computer screen. For information on operation and maintenance of standard design, see SS200–AH–MMM–010, **Technical Manual for Navy Shipboard Collective Protection System (CPS) – Alarm System, Operation and Maintenance**.

470–6.3.2.6 Zone Pressure Gauges. Pressure gauges are installed throughout each TP zone to provide a local indication of zone pressure. Their readings may vary widely within the same zone due to differences in wind speed and direction at the reference probes of different gauges. True zone pressure is shown only at the alarm panels on many ships.

470–6.3.2.7 Drain Traps in TP Zones. Traps for drains in pressure zones are four inch traps instead of standard two inch traps. The trap could be located outside the pressure zone. This larger size trap is necessary to allow for the differential between the overpressure in the TP zone and atmospheric pressure. Water in a standard size trap would be forced out. This would allow air from the pressure zone to leak through the plumbing drains, reducing the overpressure in the zone. When the zone is not pressurized, sewer gasses could leak into the compartments where the drains are located. If a four inch trap loses its water seal, it cannot be refilled while the TP zone is pressurized.

470–6.3.3 TP ZONE OPERATIONAL CONDITIONS. There are four operational conditions based on the pressure in the TP zone, normal operations, excessive pressurization, deficient pressurization and casualty condition. They are briefly described in the following subparagraphs and summarized, with casualty control procedures, in Table 470–6–2.

470–6.3.3.1 Normal Operations. CPS is designed for continuous operation. Incoming air is always filtered and the fans produce positive pressure between 1.5 inches and 2.5 inches wg above atmospheric. The CPS Alarm System shows a green light in this condition.

470–6.3.3.2 Excessive Pressurization (High Zone Pressure). If the positive pressure in a TP zone exceeds 2.5 inches wg, it is considered to be in an excessive pressurization condition. Although pressure in this range does not harm personnel or equipment, some operational difficulties can develop. If TP zone pressure exceeds 3.0 inches wg, air lock and pressure lock doors may become difficult to operate. Water in plumbing drain traps may be pushed out, leading to a loss of pressure. The CPS Alarm System shows a green light in this condition, which is the same as in normal operations. Excessive pressure can be noted by observing the local zone pressure gauges.

470–6.3.3.3 Deficient Pressurization (Low Zone Pressure). If TP zone positive pressure falls into the range below 1.5 inches down to 0.4 inches wg, the zone is in a deficient operational condition. This may occur suddenly as the result of an equipment casualty or over an extended period of time due to minor degradation of the zone boundary. The CPS Alarm System shows a yellow light in this condition.

470–6.3.3.4 Casualty Condition (Emergency Operation). If TP zone pressure drops below 0.4 inches wg, the system is operating in a casualty condition. Potential causes include those listed above for degraded operations and a major breach of zone integrity, possibly from battle damage. The CPS Alarm System shows a red light in this condition.

470–6.3.4 TP ZONE TROUBLE SHOOTING AND CASUALTY CONTROL. When the pressure in a TP zone is outside the normal operating range as described in paragraph 470–6.3.3.1, action must be taken to bring the pressure back into this range. In conditions of excessive or deficient pressurization, troubleshooting techniques are used to isolate the cause of the problem so it can be corrected. In a casualty condition, the first concern is to restore zone pressure above the Minimum Functional Status (MFS) of 0.4 inches wg. After bringing the pressure back within bounds, the next step is to find the cause of the problem and correct it. Troubleshooting guidance is found in chapter 7 of SS200–AG–MMM–010, **Technical Manual of Navy Shipboard Collective Protection System (CPS), System Description, Operation and Maintenance** and the technical manuals for various CPS components. Casualty control procedures for specific operating conditions are discussed in paragraphs 470–6.3.4.1 through 470–6.3.4.5 and summarized in Table 470–6–2.

Table 470–6–2. OPERATIONAL CONDITIONS AND CASUALTY CONTROL

Operational Condition	Positive Pressure Range	Possible Causes of Malfunction	Casualty Control Options
Normal Operation	CPS 1.5” to 2.5” wg; SACPS 0.5” to 1.5” wg	Momentary, self–correcting variations may occur due to operation of air locks and pressure locks.	None required.
Excessive Pressurization (High Zone Pressure)	CPS >2.5” wg: SACPS >1.5” wg	PCV malfunction; Exhaust fan failure; accidental closure of damper or air sweep.	Locate and correct malfunction or accidental closure.
Deficient Pressurization (Low Zone Pressure)	CPS <1.5” to 0.4” wg; (SACPS has no comparable operational condition.)	Failure of a supply fan with interlock malfunction; loss of water seal in drain trap; improper operation of air lock or pressure lock; degraded gaskets on access fittings; minor deterioration of zone boundary	1. If this condition develops as a sudden pressure drop or a sustained decline in pressure, arrest loss of pressure by securing exhaust fans, dampers or air sweeps. 2. Locate and correct malfunction.
Casualty Condition (Emergency Operation)	CPS <0.4” wg;SACPS <0.5” wg	Multiple casualties from list above for deficient pressurization; major breach of zone boundary	1. In a CB hazard environment, pass word to don protective masks. 2. In a CB hazard environment, monitor for nerve and blister agents. 3. Restore zone pressure to at least 0.4” wg (SACPS 0.5”) by securing exhaust fans, dampers, air sweeps; Multi–zone ships implement zone boosting in accordance with paragraph 470–6.3.4.4. 4. If necessary, isolate casualties or breaches of zone integrity from rest of zone in accordance with paragraph 470–6.3.4.5. 5. Correct casualties or breaches. 6. In a CB hazard environment, survey for contamination in accordance with paragraph 470–6.3.4.5. 7. In a CB hazard environment, reconnect isolated areas **only** after surface and air monitoring monitoring confirm that no contamination, persistent or nonpersistent, is present.

NOTE

The alarm indicator lights on the CPS Alarm System shall be checked once each watch by pressing the lamp test pushbutton on the front of the alarm panel. Bulbs shall be changed on any lights that fail to operate. If this does not restore the lights to proper operation, troubleshooting shall commence immediately to determine the cause and correct the problem.

NOTE

Normal operation of air locks and pressure locks can cause zone pressure to fluctuate. Pressure should stabilize after such disruptions within two minutes.

470–6.3.4.1 Casualty Control Procedures for Excessive Pressurization of TP Zone (High Zone Pressure). Attempt to lower zone pressure into the desired range by putting one or more three–position exhaust dampers in the fully open position. Check all exhaust dampers for proper operation. Monitor zone pressure while executing these procedures. It should fall but do not allow it to remain consistently low. If necessary, allow a high pressure condition to continue and warn all hands on the general announcing system that air lock and pressure lock doors may be difficult to operate. Perform troubleshooting and repairs in accordance with the following list and the applicable CPS technical manuals.

1. Check the air sweeps in air locks and CPS decon stations for proper operation.

2. Check each exhaust fan for proper operation. If an exhaust fan has failed, the companion supply fan can be secured to lower zone pressure unless it is the only operational supply fan in the affected TP zone.

3. Check to see that three position exhaust dampers (if so outfitted) are properly set. Ensure that standard exhaust dampers have not been closed accidentally.

4. Check Pressure Control Valves (PCV's) for proper operation.

5. Check exhaust ducting and discharge ports for blockage.

6. Ensure that dampers in the exhaust ducting are open.

WARNING

In a casualty condition when a TP zone is operating below the design pressure for normal operations, air lock purging times shall be increased to allow for the reduced flow through the air sweeps. It takes longer to achieve seven to nine air changes than it would under normal conditions.

470–6.3.4.2 Casualty Control Procedures for Deficient Pressurization of TP Zone (Low Zone Pressure). Generally, no adjustments to restore zone pressure are necessary other than to find and correct the cause of the pressure loss. Perform troubleshooting and repairs in accordance with the following list and the applicable CPS technical manuals. This could be considered a casualty situation if a sudden pressure drop occurs or a steady pressure drop continues. In this case, immediate steps should be taken to arrest the pressure drop. The emergency measures for restoring zone pressure provided in paragraph 470–6.3.4.3, step b, are applicable.

1. In a chemically or biologically contaminated environment, pass the word that additional time is required for purging air locks when entering or exiting the degraded zone. Personnel who have been topside or otherwise exposed to liquid or solid CB contamination may enter the zone only through a decontamination station.

2. Ensure that all zone boundaries are secure, first accesses, then drain traps and cableways.

3. Check to see that three–position exhaust dampers (if so outfitted) are properly set.

4. Check for obstructions in supply ductwork, including clogged filters and closed dampers.

5. Check each supply fan and its interlock with its companion exhaust fan.

6. Check Pressure Control Valves (PCV's) for proper operation.

7. Check deck drain traps to ensure that they are filled with water to the proper level. If the water seal is lost in a contaminated environment, it may not be possible to restore it until the ship has reached a clean atmosphere. In this case, a DC plug may be used in the drain to temporarily stop the leakage of air.

470–6.3.4.3 Casualty Control Procedures for a Casualty Condition (Emergency Operation). This condition may develop gradually as the situations that produced a deficient pressurization condition worsen or it may be the result of a major breach of zone integrity, such as battle damage, or the loss of a set of fans. Even a slight positive pressure, less than 0.4 inches wg, provides some protection against CB contaminants if the flow of filtered air can be maintained. The first priority is to restore and maintain zone pressure in the 0.4 to 1.5 inch wg range. The second is to make repairs and restore zone pressure to the design operating range. Perform troubleshooting and repairs in accordance with the following list and the applicable CPS technical manuals.

a. In a contaminated environment:

1. Pass the word for all personnel in the deficient zone to don masks.

2. Pass the word that additional time is required when entering or exiting the affected zone. Personnel who have been topside or otherwise exposed to liquid or solid CB contamination may enter the zone only through a decontamination station.

3. Monitor for a CB hazard to determine if the TP zone has been contaminated.

4. Don masks and protective clothing as needed in accordance with paragraphs 470–5.1.1 through 470–5.1.2.

b. To restore zone pressure, implement the following measures in the order given until the positive pressure is in the 0.4 – 1.5 inch wg range:

1. Ensure that the dampers are closed on any fans that have stopped or been secured.

2. Secure an exhaust fan and close its dampers.

3. Secure CPS decontamination station and close air sweep.

4. Secure selected air locks and secure their air sweeps.

5. Isolate damaged areas from the rest of the zone if possible.

6. Attempt to maintain some pressure in a damaged pressure zone with air from an adjacent pressure zone until the damage can be repaired. This is called zone boosting. Guidelines on the use of this procedure are found in paragraph 470–6.3.4.4.

If the pressure loss in the damaged zone cannot be controlled, the entire zone shall be isolated and manned by personnel wearing appropriate protective clothing.

WARNING

Under certain conditions, pressure from one TP zone may be used to boost the pressure in an adjacent TP zone in which a CPS casualty has occurred. The pressure in both zones is likely to remain below the design range for normal operations. In this case, air lock purging times shall be increased **in both zones** to allow for the reduced flow through the air sweeps. It takes longer to achieve seven to nine air changes than it would under normal conditions.

470–6.3.4.4 Zone Boosting. Some pressure can be maintained in a damaged TP zone with zone boosting. In this procedure, air from an adjacent, fully functional TP zone is used to pressurize the damaged TP zone until the casualty can be repaired. In zone boosting, interconnecting doors between the damaged zone and the functional TP zone are opened. The following conditions must be satisfied to use zone boosting.

a. The adjacent zone is at least as large the degraded zone, with, as a minimum, approximately the same filtration capacity.

b. Monitoring in the degraded zone indicates no contamination is present.

c. Positive pressure in the combined zones can be maintained above 0.4 inches wg.

WARNING

Do not reconnect an area that has been isolated from the Collective Protection System due to a casualty until the absence of contamination in the area is confirmed.

470–6.3.4.5 Isolating TP Zones or Areas Within TP Zones. If the pressure in a TP zone cannot be maintained 0.4 inches wg or more above atmospheric with zone boosting, it is necessary to isolate the TP zone, or an area within it, from the rest of the Collective Protection System. To isolate an area within a zone, close all accesses to the area and block all ventilation openings into it. To isolate a TP zone, open the air sweeps on type III air locks into the isolated zone. If the casualty can be restored, the isolated zone or area can be reconnected to the CPS **only** if surface and air monitoring determine that no contamination persistent or nonpersistent, is present.

470–6.3.4.6 CPS Reset Procedure. In an uncontaminated environment, normal start–up procedures can be used to reset a CPS zone that has been operating in the unpressurized mode due to a casualty. In a contaminated environment, some added precautions are required.

1. The zone shall be monitored to confirm that it is free of contamination.

2. Check all drain traps before raising zone pressure. The loop seals cannot be refilled under pressure.

3. Air sweeps on Type I and II air locks and CPS decontamination stations shall not be reopened until zone pressure is at 0.4 inches wg or above.

470–6.4 NEW CONSTRUCTION CPS LIMITED PROTECTION (LP) ZONES

470–6.4.1 LP ZONE DESIGN AND COMPONENTS. Limited Protection (LP) zones are designed to provide protection against CBR contaminants in a solid or liquid form. They do not provide protection against chemical agents in vapor form. Limited protection is achieved by passing incoming air through HEPA filters. The HEPA filters remove aerosols and larger particles from the air supply, so chemical and biological aerosols cannot enter an LP zone through the ventilation system. LP zones are not pressurized, so it is possible for liquid or solid CB contamination to enter by other routes. Normally, if machinery spaces are included in a CPS, they are covered by limited protection, with the possible exception of Engineering Operating Stations, which may be in TP zones. Machinery spaces are generally large compartments and the heat load may be fairly high. As a result, they require a very high ventilation rate. TP coverage is impractical because of the weight, space and power requirements of the additional fans that would be needed to pressurize these hot, large volume spaces. In a chemical or biological hazard environment, mask–only posture is sufficient in LP zones if four conditions are met.

a. No accesses to contaminated areas are opened, as explained in Table 470–6–3.

b. The TP zone from which make–up air is provided is functioning properly. See paragraphs 470–6.2.1.2 and 470–6.4.1.2 for an explanation of makeup air to machinery spaces.

c. Bulkhead and deck penetrations for piping and cabling are properly sealed.

d. Conditions that could produce a percutaneous vapor hazard inside the ship do not exist. See paragraph 470–2.3.3.3 and 470–2.3.3.4 for a discussion of these conditions.

470–6.4.1.1 LP Zone Access. Type II air locks provide access between LP zones and TP zones. Standard access fittings are used between LP zones and unprotected spaces but their use is restricted in a contaminated environment. See Table 470–6–3 for guidance.

WARNING

Diesel and gas turbine enclosures cannot be isolated from outside air. If it is necessary to enter these spaces to take readings in a contaminated environment, chemical or biological aerosols could enter and contaminate the machinery space. If the machinery space ventilation is operating, this infiltration occurs even more readily because of excess exhaust.

470–6.4.1.2 LP Zone Excess Exhaust. As explained in paragraph 470–6.2.1.2, machinery space ventilation is designed with an excess of exhaust capacity over supply to allow for expansion of air due to heat. In LP zones, make–up air is provided from TP zones through the air sweeps in Type II air locks. Thus, air from the outside of the ship does not bypass the HEPA filters and enter the LP zones as make–up air.

470–6.4.1.3 Compressed Air Systems in LP Zones. Solid, liquid and gaseous contaminants are filtered from compressed air supplied to LP zones. The incoming air is filtered before it enters the compressor.

470–6.4.1.4 LP Zone HEPA Filter System. Supply air for LP zones is filtered through HEPA filters with a rated flow capacity of 2000 cfm. The number of filters in the system depends on the supply airflow requirements of the LP zone. A Navy Standard Impingement Filter (NSIF) is installed upstream of each HEPA filter to remove large dust particles from the airstream and extend the life of the HEPA filter.

470–6.4.1.5 Other LP Zone Ventilation Components. There are no other special ventilation components or features for LP zones. Conventional ventilation equipment is used for standard applications.

470–6.4.2 VENTILATION CONTROL IN LP ZONES. Casualty control in LP zones consist of the same ventilation control measures and purging procedures that are prescribed for conventional ventilation systems in paragraphs 470–6.2.1.2, 470–6.2.1.3 and 470–6.2.2.

470–6.5 SELECTED AREA COLLECTIVE PROTECTION SYSTEM (SACPS)

470–6.5.1 SACPS ZONE DESIGN. The Selected Area Collective Protection System is installed as a backfit on selected ships that were built prior to the introduction of the Collective Protection System on new ship construction. SACPS provides filtered ventilation supply air to protected zones on demand. A slight positive pressure is maintained in each zone to prevent airborne CBR contaminants from entering through leaks at the zone boundary. Limited protection, defined in paragraph 470–6.1.2.2, is not included in an SACPS design. SACPS zone boundaries are watertight or airtight. SACPS designs make use of existing ventilation equipment to minimize modifications to the ship during retrofit. Some of the major differences in design between SACPS and CPS are described in the following paragraphs.

470–6.5.1.1 SACPS Coverage. SACPS is provided for selected operational and stand–down areas. Machinery spaces are not included. The number, size and arrangement of SACPS zones vary from ship to ship. The percentage of the ship to which protection is provided is likely to be lower with SACPS than with new construction CPS. It is harder and more expensive to add collective protection as a backfit than integrating it in the original design and installing it during construction.

470–6.5.1.2 Positive Pressure. Pressure in an SACPS zone is maintained between 0.5 and 1.5 inches wg.

470–6.5.1.3 SACPS Zone Operating Modes. SACPS is normally operated in the unpressurized mode in current designs. It is operated in the pressurized mode when a CBR threat exists.

470–6.5.1.4 SACPS Zone Access. Air locks are provided for access to SACPS zones. Pressure locks are not normally included in SACPS designs. SACPS decontamination stations could also be included in future SACPS designs. The guidance in Table 470–6–3 applies to access to an activated SACPS zone for air locks and CPS decon stations, if installed. If a ship with SACPS does not have an SACPS decon station, personnel who have been topside or otherwise exposed to radioactive contamination shall go through the decontamination process in a conventional decon station. If they need to enter an SACPS zone, they shall proceed from the decon station to an air lock through a part of the ship that is not contaminated. Air lock procedures are similar to those provided for new construction CPS air locks in paragraph 470–6.7.1.3. Details are provided in the SACPS technical manual for the ship class. Purge times shall be posted outside both air lock doors.

470–6.5.2 SACPS ZONE COMPONENTS. Existing HVAC components are used in SACPS to the extent possible. Some unique SACPS equipment is added.

470–6.5.2.1 SACPS Supply Fans. High pressure centrifugal fans are added as a part of the backfit to provide positive pressure in the SACPS zones.

470–6.5.2.2 SACPS Alarm System. An SACPS alarm panel somewhere in each zone alerts the crew when pressure has dropped below the Minimum Functional Status (MFS), 0.5 inches wg above atmospheric pressure. A green light on the panel indicates that the pressure in the zone is above MFS. If the pressure drops below this level, a red light comes on and an audible alarm sounds at the alarm panel. There is no yellow light on the SACPS alarm panel.

470–6.5.2.3 Drain Traps in SACPS Zones. The plumbing drain traps in an SACPS zone shall be at least two inches deep.

470–6.5.2.4 Other SACPS Components. The same CBR filters, prefilters and filter housings used in new construction CPS are used in SACPS. Pressure control valves (PCV's) used in SACPS are similar to those used in new construction but they operate in the SACPS pressure range. The zone pressure gauges are also similar to their CPS counterparts but they are marked in accordance with the operating conditions of SACPS. Since SACPS is not designed for full time pressurized operation, there is no need for a three-position exhaust damper.

470–6.5.3 SACPS OPERATIONAL CONDITIONS. There are three operational conditions based on the pressure in the SACPS zone, normal operations, excessive pressurization and casualty condition. There is no deficient pressurization condition. They are briefly described in the following subparagraphs. The casualty control procedures for excessive pressurization and casualty condition are summarized in Table 470–6–3, with differences between CPS and SACPS noted. CPS procedures are described in paragraph 470–6.3.4 and its subordinate paragraphs. They should be used for guidance, with appropriate modifications for SACPS differences.

470–6.5.3.1 Normal Operations. The pressure is .5 to 1.5 inches wg above atmospheric. The SACPS Alarm System shows a green light in this condition.

470–6.5.3.2 Excessive Pressurization (High Zone Pressure). If positive pressure in an SACPS zone exceeds 1.5 inches wg, it is considered to be in an excessive pressurization condition. Although positive pressures above this level do not harm personnel or equipment, some operational difficulties can develop. Air lock and pressure lock doors may become difficult to operate. Water in plumbing drain traps may be pushed out, leading to a loss of pressure. The SACPS Alarm System shows a green light in this condition. Excessive pressure can be noted by observing zone pressure gauges.

470–6.5.3.3 Casualty Condition (Emergency Operation). If SACPS zone positive pressure drops below 0.5 inches wg, the system is operating in a casualty condition. This may occur suddenly as a result of an equipment casualty or a major breach of zone integrity, possibly from battle damage. It may also occur gradually, over an extended period of time, due to minor degradation of the zone boundary. The SACPS Alarm System shows a red light in this condition.

470–6.6 CPS MAINTENANCE

470–6.6.1 ORGANIZATIONAL AND INTERMEDIATE LEVEL MAINTENANCE RESPONSIBILITIES. Replacement of CPS filters and prefilters and leak tests on CBR filter systems are performed by an intermediate maintenance facility. Other troubleshooting and maintenance actions, including replacement of prefilters, are performed by ship's force.

470–6.6.2 CPS AND SACPS TECHNICAL DOCUMENTATION. Maintenance and operation of CPS, SACPS and their components are described in the technical manuals listed in Appendix B.

470–6.7 ACCESS TO CPS ZONES

470–6.7.1 ACCESS CONTROL. Air locks, pressure locks and CPS decontamination stations provide access to TP zones while maintaining the positive pressure and preventing the entry of contaminants.

470–6.7.1.1 Air Locks. An air lock is a small, two–door compartment. The inner door opens to a pressurized zone, the outer door to an unpressurized area or another TP zone. Air locks vary in size, depending on ship arrangements and the need for special configurations. A typical air lock is shown in Figure 470–6–3. When properly used, they allow personnel to enter and exit pressure zones without pressure loss or introduction of airborne contamination into the zone. To ensure that pressurization is not lost in transiting to and from the pressurized area, only one door is opened at a time. The air lock is swept diagonally from top to bottom with filtered air from the TP zone to purge airborne contamination that may enter when the outer door is opened in a CBR hazard environment. There are three types of air locks:

a. Type I – An air lock that connects a TP zone with the weather. Air from the TP zone is swept continuously from top to bottom and across the air lock. In a contaminated environment, a type I air lock can be used only to exit, not to enter, the ship.

b. Type II – An air lock that connects a TP zone with an LP zone or other unpressurized internal areas of the ship. Air from the TP zone is swept continuously from top to bottom and across the air lock. Personnel in interior spaces in which the absence of beta radiation has been confirmed may use a Type II air lock to enter a TP zone.

CAUTION

Activating the air sweep in a Type III air lock may cause a reduction in pressure in the TP zone that is providing the air. It may be necessary to secure the air sweeps to some of the Type I or II air locks in that zone while a Type III air lock is in use.

c. Type III – An air lock that is used to connect two pressure zones. This type of air lock is used as a damage control feature should pressure be lost in one of the zones. These air locks have fittings that allow purging in either direction. The air sweep fittings of the Type III air lock are normally closed. However, in the event that an adjacent zone is breached and loses pressure, the air sweeps of the type III air lock leading to that zone can be activated to establish a new CPS boundary. With the air sweeps operating, a Type III air lock can be used as a Type II air lock.

WARNING

In a casualty condition when a TP zone is operating below design pressure, air lock purging times shall be increased to allow for the reduced flow through the air sweeps. It takes longer to achieve seven to nine air changes than it would under normal conditions.

470–6.7.1.2 Purging Vapor Contamination from Air Locks. After the outer door is closed, seven to nine air changes sufficiently reduce the concentration of any contamination in the air lock to a level at which the inner

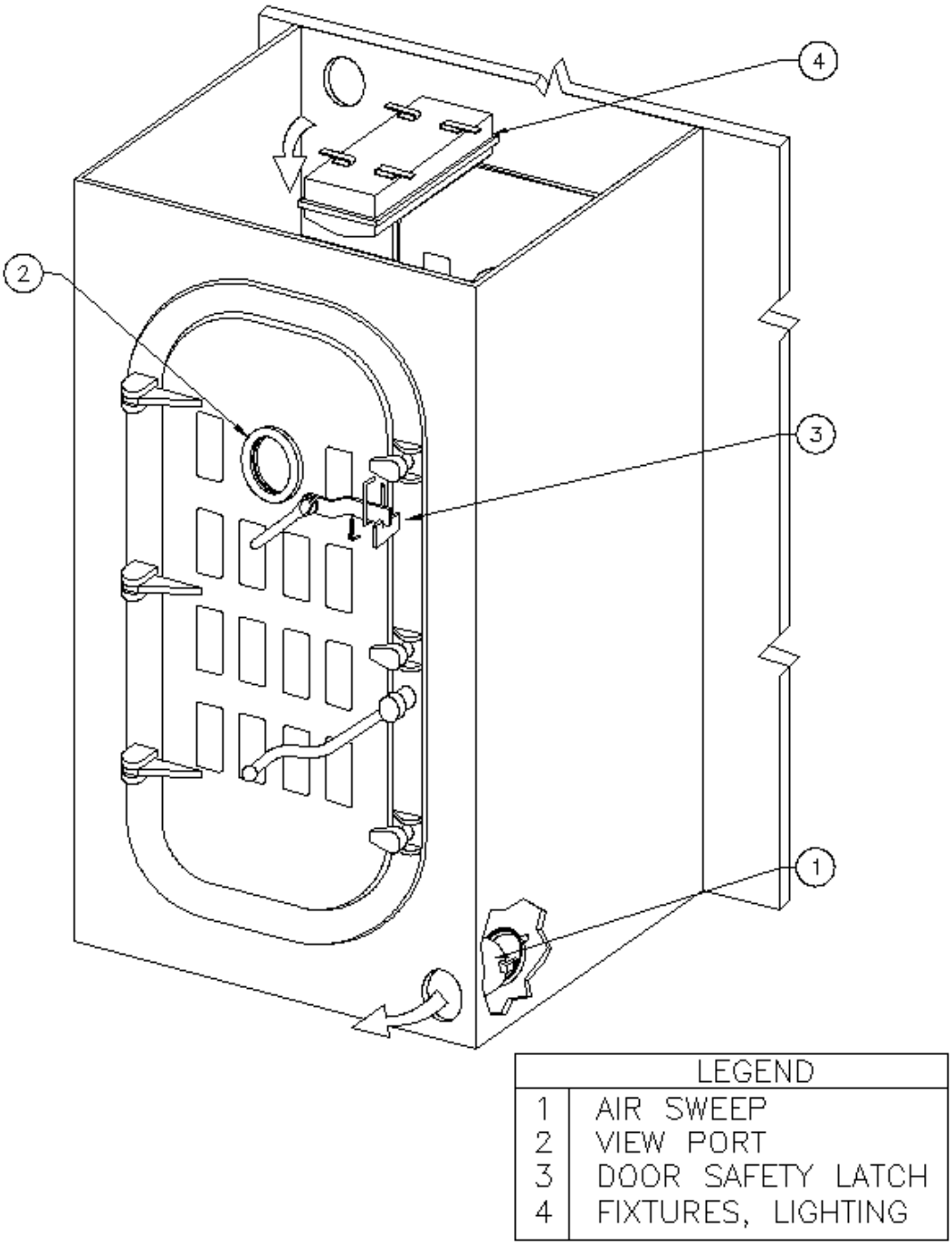

Figure 470–6–3. Typical Air Lock Configuration

door can be opened with little risk of contaminating the TP zone. Purge times vary with size of air locks. A typical 4 ft x 4 ft x 7 ft air lock, swept with the design air flow of 420 cubic feet per minute (420 CFM), can be purged in two (seven air changes) to two and a half (nine air changes) minutes. Larger air locks take longer to purge. The procedure for calculating purge time is illustrated in paragraph 470–6.2.2.1. Purge times shall be posted outside both entrances to an air lock.

WARNING

An air lock on which the air sweeps have been secured for casualty control purposes or any other reason shall not be used in a CBR hazard environment.

WARNING

When using air locks, care shall be taken to prevent the doors from rapidly opening or closing and possibly causing personnel injury. This may occur when an air lock door is opened while the opposite door is open, or when both doors are opened simultaneously. To prevent injury, air locks are equipped with safety latches that prevent rapid opening or closing of doors.

CAUTION

A viewing port is provided in air lock doors for safety. Before opening the door to enter an air lock, personnel shall look into the lock to ensure that it is unoccupied and that the other door is closed.

470–6.7.1.3 Entering and Exiting Air Locks. If there is no CBR threat, it is not necessary to wait for an air lock to purge but it is necessary to open only one door at a time to avoid losing pressurization. The following guidance is provided for entering or exiting an airlock in a chemical or biological warfare environment. More specific procedures may be provided for individual ships or classes in DC books, Ship's Information Books or HVAC manuals.

a. Entering the TP zone: Personnel within an enclosed area of the ship that has not been contaminated with liquid or solid agents can enter a TP zone through a Type II air lock. The person shall close and dog the outer door and wait in the air lock for the specified period of time to allow purging of airborne contaminants (seven to nine air changes) that entered the air lock when the outside door was opened. When the purge cycle is complete, the individual opens the inner door and enters the TP zone.

b. Exiting the TP zone: When exiting a CPS zone through any type of air lock, personnel shall don gas masks and, if required, protective clothing, before entering the air lock. Exiting personnel shall wait for one purge cycle (seven to nine air changes) before opening the inner door. This ensures that there are no toxic gases in the air lock when the inner door is opened. When the purge cycle is complete, the person then enters the air lock, closes and dogs the inner door, immediately exits and closes the outer door.

WARNING

A pressure lock between a TP zone and an unpressurized space or weather deck shall not be used to enter or exit the TP zone in a contaminated environment.

WARNING

When using pressure locks, care shall be taken to prevent the doors from rapidly opening or closing and possibly causing personnel injury. This may occur when a pressure lock door is opened while the opposite door is open, or when both doors are opened simultaneously. To prevent injury, pressure lock doors are equipped with safety latches that prevent rapid opening or closing of doors.

CAUTION

A viewing port is provided in pressure lock doors for safety. Before opening the door to enter a pressure lock, personnel shall look into the lock to ensure that it is unoccupied and that the other door is closed.

470–6.7.1.4 Pressure Locks. Pressure locks are similar to air locks in configuration but do not have air sweep fittings for purging. Pressure locks provide routine access to a TP zone in an uncontaminated environment while maintaining positive pressure. The procedures for using a pressure lock are the same as those for an air lock in an uncontaminated environment. Like air locks, only one door is opened at a time. The first door opened shall be dogged before opening the second.

470–6.7.1.5 Revolving Pressure Doors. Some LHD 1 class ships have one or two revolving pressure doors between TP Zone 2 and the messing areas for the crew and embarked troops. They facilitate access between these spaces when the ship is operating in the pressurized mode in an uncontaminated environment. To reduce wear and tear on the gaskets, the revolving pressure doors shall not be used when the ship is operating in the unpressurized mode.

470–6.7.1.6 CPS Decontamination Station. Personnel who may be contaminated with liquid or solid agent, including **all** personnel whose duties require them to be on the weather decks in a CBR hazard environment, shall enter a CPS zone only through a CPS decontamination station. These single purpose installations are activated only in a chemical, biological or radiological hazard environment. They are not used as showers or for any other purpose other than CBR decontamination. The standard design is a four–compartment layout adjacent to a pressure zone. Personnel enter from the weather through the Outer Clothing Undressing Area (OCUA), proceed to the Inner Clothing Undressing Area (ICUA), then into the shower and, finally, into the Contamination Purge Lock (CPL) before entering the TP zone. As an individual is processed through a CPS decon station, the door to each compartment is closed before opening the door to the next compartment. This prevents loss of pressurization in the TP zone. The positive pressure from the zone is stepped down in each of the four compartments to create an air sweep from the CPL into the shower, then the ICUA and, lastly, the OCUA, from which it is exhausted to the weather. A more detailed description of the standard layout is provided in paragraph 470–7.2.1.3. Personnel decontamination procedures in a CPS decon station are described in paragraph 470–7.5.4 and its subordinate paragraphs.

470–6.7.1.7 TP Zone Access. The types of accesses that may be used to enter and exit CPS zones in contaminated and uncontaminated environments are summarized in Table 470–6–3.

Table 470–6–3. CPS ZONE ENTRY AND EXIT (All protected zones intact, TP zones pressurized)

From	To	Uncontaminated Environment	Contaminated Environment
TP Zone	TP Zone	Type III Air Lock or Pressure Lock	Pressure Lock (if zone pressure is at MFS or above) or Type III Air Lock.
TP Zone	Unpressurized space (Note 1)	Air Lock or Pressure Lock	Air Lock (Note 2)
TP Zone	Weather Deck	Type I Air Lock or Pressure Lock	Type I Air Lock
LP Zone	TP Zone	Type II Air Lock or Pressure Lock	Type II Air Lock
LP Zone	Interior Space with conventional ventilation	In current ship configurations, machinery space escape trunks are the only accesses of this type. They are intended for use in emergencies, not routine access.	LP zone can be contaminated with aerosols if these accesses are opened. They are intended for emergency egress only.
LP Zone	Weather Deck	In current ship configurations, machinery space escape trunks are the only accesses of this type. They are intended for use in emergencies, not routine access.	LP zone can be contaminated with liquid or solid agent, including aerosols, if these accesses are opened. They are intended for emergency egress only.
Interior Space with conventional ventilation (Note 3)	TP Zone	Type II Air Lock or Pressure Lock	If only vapor contamination is present, Type II Air Lock. If liquid or solid contamination is present, CPS Decon Station.
Interior Space with conventional ventilation	LP Zone	In current ship configurations, machinery space escape trunks are the only accesses of this type. They are intended for use in emergencies, not routine access.	LP zone can be contaminated with aerosols if these accesses are opened. LP zone can be contaminated with liquid or solid agent if these accesses are used for entry. They are intended for emergency egress only.
Weather Deck	TP Zone	Type I Air Lock or Pressure Lock	CPS Decon Station
Weather Deck	LP Zone	In current ship configurations, machinery space escape trunks are the only accesses of this type. They are intended for use in emergencies, not routine access.	LP zone can be contaminated with liquid or solid agent, including aerosols, if these accesses are opened or used for entry. They are intended for emergency egress only.

Note 1. Includes LP zones, spaces with conventional ventilation and conditional spaces (OTP zones) that have been isolated from the rest of the TP zone for operational reasons.
Note 2. Direct access from a TP zone to an adjacent conditional space that has been isolated is not permitted except through an airlock in a contaminated environment.
Note 3. Includes conditional spaces (OTP zones) that have been isolated from the TP zone.

SECTION 7.
CONTAMINATION CONTROL

470–7.1 INTRODUCTION TO CONTAMINATION CONTROL

470–7.1.1 THE CONCEPT OF CONTAMINATION CONTROL. Contamination control is the employment of systems, equipment and procedures to minimize the negative impact of chemical or biological contamination on a ship's operational capabilities.

470–7.1.2 ELEMENTS OF CONTAMINATION CONTROL. A ship's contamination control capability consists of procedures and material used in the execution of those procedures. Permanently installed systems, portable equipment and consumable supplies are all used in contamination control. Procedures used in contamination control fall into three functional areas.

a. Contamination avoidance measures limit or prevent exposure to chemical and biological agents.

b. Ship decontamination is the removal or neutralization of a chemical or biological hazard on shipboard surfaces and fixed equipment.

c. Personnel decontamination is the removal or neutralization of a chemical or biological hazard on the bodies, clothing or portable equipment of individuals.

470–7.1.3 CONTAMINATION AVOIDANCE METHODS. Contamination avoidance measures are intended to prevent or reduce the deposition of contamination on a ship and to restrict access to the contaminated areas. General information is provided in the subordinate paragraphs that follow. Information on specific measures can be found in paragraph 470–7.3.

470–7.1.3.1 Avoidance Maneuvering. If information is available about the locations of releases of chemical or biological agents and their dispersal pattern, and if the ship's assigned mission permits, the ship can be steered to avoid or minimize contact with the agents.

470–7.1.3.2 Contamination Reduction Measures. If exposure to chemical or biological agents is unavoidable, contamination reduction measures may be used to minimize the amount of contamination that adheres to the ship.

470–7.1.3.3 Access Control. The purpose of access control measures is to keep the encroachment of contamination into clean areas of the ship to a minimum.

470–7.1.4 BASIC SHIP DECONTAMINATION METHODS. Persistent biological or chemical agents that remain on shipboard surfaces or are sorbed into coatings are contamination problems. It is best to avoid becoming contaminated, if possible. If it is unavoidable, there are three basic processes by which decontamination is performed. Two are active, requiring the use of equipment and manpower to some degree and, in some cases, the expenditure of material. One is passive, requiring only the passage of time. Depending on the characteristics of the agent and the operational situation, one or a combination of these actions will be the most appropriate choice for decontamination. General information is provided in the subordinate paragraphs that follow. Information on specific measures can be found in paragraph 470–7.4.

470–7.1.4.1 Physical Removal. Physical removal involves the use of mechanical action to carry the agent away. In some cases, a detergent can be used to reduce the adhesion of the agent to shipboard surfaces or to increase its solubility in water and make it easier to remove. Many agents are soluble in organic cleaning solvents but the availability of such solvents on board ship is limited because of the safety hazards they present. It is important to remember that a chemical or biological agent's toxic properties are not changed by physical removal methods. This may also be true of the infectious properties of a pathogen. Therefore, care must be taken to ensure that contamination is not simply moved from one place on the ship to another.

470–7.1.4.2 Chemical Neutralization. In this process, the agent is decomposed by a chemical reaction. Nearly all persistent chemical agents can be decomposed by strong oxidizers, such as bleaches. Strong oxidizers also destroy most biological agents. After neutralization, the residue should be physically removed from the ship for it can be caustic, acidic, or even somewhat toxic. Some agents can be decomposed by hydrolysis, a reaction with water, but this process is so slow in most cases that it is of little value in active decontamination.

470–7.1.4.3 Natural Decay. The toxicity of chemical agents and biological toxins and the infectiousness of pathogens diminish over time due to the effects of the environment. This is called **weathering**. Typically, chemical neutralization and physical removal cannot be expected to completely eradicate all contamination on a ship. Thus, even if the hazard level is reduced by other means, some of the contamination is normally left to decay.

470–7.1.5 BASIC FUNCTIONS IN PERSONNEL DECONTAMINATION. Personnel decontamination procedures are designed to minimize the hazards to contaminated individuals and to prevent the spread of contaminants inside the ship. All personnel exposed to the weather during or after a chemical attack shall be considered contaminated and shall reenter the ship through a decontamination station or Contamination Control Area (CCA). The basic procedures are generally the same for all ships. Variations are due to differences in the design and location of the decontamination stations. The basic decontamination process for personnel reentering the ship in a chemical hazard environment consists of five stages that are common to all ships. General information is provided in the subordinate paragraphs that follow. Information on specific procedures can be found in paragraph 470–7.5.

a. Stage 1. Gross decontamination of masks, boots and gloves prior to reentering the ship. Gross decon is performed outside the entrance to the CCA or the CPS decon station (see paragraph 470–7.2.1.2) to reduce the danger of spreading liquid contamination into the ship.

b. Stage 2. Removal of outer garments and equipment subjected to liquid contamination. The chemical protective overgarment shall be cut off the person being decontaminated (doffee). This step is performed as close to the point of entry into the interior of the ship as possible.

c. Stage 3. Removal of inner clothing.

d. Stage 4. Showering.

e. Stage 5. Medical review. A Medical Department representative screens all doffees for symptoms of agent exposure and other medical problems such as heat stress.

470–7.2 CONTAMINATION CONTROL SYSTEMS, EQUIPMENT AND MATERIAL

470–7.2.1 FIXED SYSTEMS USED IN CONTAMINATION CONTROL. The countermeasures washdown system and personnel decontamination stations are the permanently installed systems used in contamination control. There are two types of decon stations. Ships that have a Collective Protection System (CPS) have a dedicated four–compartment decon station for access from the weather to a TP zone. This type of facility is referred to as a CPS decontamination station. Collective Protection Systems are discussed in Section 6. Decon stations that are not associated with a collective protection system (CPS) are referred to as conventional decontamination (decon) stations. Specific washrooms and showers are designated in the ships plans for this purpose. It is possible for a ship with partial CPS coverage to have both CPS and conventional decon stations.

WARNING

Flight deck operations will be severely impacted by the use of the countermeasures washdown system. The effect of salt water on the aircraft, weapons and support equipment depends on the type of operations being conducted and the degree of exposure.

WARNING

Use of the countermeasures washdown system reduces the amount of sea water available for other uses, such as firefighting.

470–7.2.1.1 The Countermeasures Washdown (CMWD) System. The countermeasures washdown system is a dry pipe sprinkler system that provides a moving screen of sea water over the weather surfaces of the ship. The flowing water carries away most of the liquid and solid contaminants that fall on the decks or bulkheads. More complete wetting of weather surfaces is achieved if the ship is maneuvered to vary the direction of the relative wind. Optimum results are achieved by steering a sinuous course 30 degrees either side of the base course. In cases where a steady course must be maintained, dry spots can be expected that may have a higher level of contamination than the rest of the ship. On aircraft carriers, the countermeasures washdown system is also used for fighting flight deck fires. The operation and maintenance of the system are discussed in the piping section of the **Ship Information Book**.

NOTE

If mission requirements prevent activation of some sections of the countermeasures washdown system, partial activation is preferable to not operating it at all.

NOTE

Periodic testing and inspection in accordance with the Planned Maintenance System is necessary to ensure that the countermeasures washdown system is ready for use if needed.

470–7.2.1.2 Conventional Decontamination (Decon) Station. Specific sanitary spaces are designated in ships' plans as decontamination stations. Normally, a ship that does not have a CPS will have at least two conventional decon stations, one forward and one aft. Smaller ships may have only one. Large ships may have two additional stations amidships, one port and one starboard. Conventional decontamination stations generally have salt water nozzles in the shower stalls in addition to fresh water nozzles. Large ships may have additional salt water decontamination stations. Multiple decon stations and the availability of both salt and fresh water provide redundancy for working around contaminated areas and battle damage. The availability of salt water service also provides the flexibility to support fresh water conservation when necessary. It is desirable to have two accesses to each decon station to permit designation of one as the entrance, or dirty side, and one as the exit, or clean side. In a typical head or washroom, the entrance should be in the sink area and the exit in the shower area. Where variations from this arrangement are necessary, tape will be used to mark traffic lanes to separate the clean and dirty areas.

470–7.2.1.3 Contamination Control Area (CCA). The CCA is a liquid chemical hazard area or a biological infectious hazard area for removal of contaminated individual protective equipment or outer garments and preparation of personnel for processing through a conventional decontamination station. Removal of these items in the CCA prevents liquid chemical contamination and infectious biological hazards from reaching the rest of the ship's interior. The CCA may be collocated with the decon station if the station has a weather access and enough room. CCA's can be set up at several locations. In fact, each decon station can have more than one CCA. It is also possible for a single CCA to serve more than one decon station. Each ship shall identify primary and secondary CCA's in accordance with the following criteria:

a. CCA spaces should be approximately 6'x8' (larger if space allows; 5'x7' minimum) adjacent to or as near as possible to the outer skin at the weather entrance. If possible, the CCA should be located just inside the area marked as the Decontamination Station entrance. If suitable interior space is unavailable, a designated deck area outside the superstructure, preferably with overhead cover, will work. The hangar bays of CV, CVN, LHA and LPH are excellent locations for CCA's. Helo hangars of smaller ships are also good locations.

NOTE

Some ships do not have a space with these dimensions available; a space with approximately the same square footage will suffice as long as the cutter has enough room to effectively do his job. CCA's are not intended to be permanent locations. Spaces with other functions are utilized. Alternate spaces shall be identified for use in the event that the designated location is unusable due to battle damage.

b. The CCA should have access directly from the weather deck and shall have a separate exit into the interior of the ship.

c. If possible, the CCA should have a deck drain to facilitate cleaning. One advantage of collocating a CCA with a decon station is the availability of a deck drain.

d. When the CCA is set up, Positions #1, #2, and #3 should be marked on the deck with paint, pressure sensitive tape or duct tape, whichever is more suitable, similar to Figure 470–7–1 (for ships with small CCA areas to employ one cutter) or Figure 470–7–2 (for ships with large CCA's to employ two cutters).

470–7.2.1.4 CPS Decontamination Station. The CPS decon station is dedicated to the single purpose of decontamination of personnel who have been exposed to chemical, biological or radiological agents. The CPS decon station contains four compartments, as shown in Figure 470–7–3. A typical layout is shown in Figure 470–7–4.

a. Outer Clothing Undressing Area (OCUA). This is the entry point from the weather. It is a liquid chemical hazard area or a biological infectious hazard area. Outer garments are removed here by a cutter, as in the CCA of a non–CPS decon station. A grab rail is installed that allows the individual to swing up onto a raised platform after his footwear is removed. This prevents him from picking up contamination from the deck on his socks.

b. Inner Clothing Undressing Area (ICUA). Inner garments are removed and bagged for delivery to the laundry. The ICUA is a vapor hazard area.

c. Deluge Shower. A multi–nozzle shower discharges water at a high rate of flow at various angles. The shower is a four–legged bird cage structure with 28 nozzles. The shower is operated by an attendant in the TP zone who can observe and direct the process using a window or viewport. The shower is provided with either sea water or fresh water through a quick–disconnect hose. Sea water is used after a chemical or biological attack. Fresh water is used for training because sea water leaves a residue.

d. Contamination Purge Lock (CPL). This chamber is an air sweep, primarily for drying personnel and purging any remaining gaseous contaminants before the individual enters the protected area of the ship. It serves as the air lock for entering the protected area.

The CPS decon station has several features that make decontamination of the station itself easier. Its compartments are smooth–sided and have no sharp corners. This eliminates pockets where contamination can collect. The decks are made of stainless steel, which is highly resistant to penetration by chemical agents and to damage from the strong oxidizers used in decontamination of the station. Also, deck drains are available inside the decon station for disposal of decon solution. Finally, the station has a continuous air sweep through all four compartments to remove gaseous contaminants.

470–7.2.1.5 Gross Decontamination Area. An area for gross decontamination is established at the weather entrance to the CCA for a conventional decon station or the OCUA of a CPS decon station. It is desirable if the area is under an overhang or in a hangar bay but this may not be possible at all locations. The primary requirement is that doffees are able to step directly from the bootwash into the CCA or OCUA. The layout of a chemical gross decon area is shown in Figure 470–7–1 and Figure 470–7–2.

470–7.2.2 MATERIAL REQUIREMENTS FOR DECONTAMINATION STATIONS AND CONTAMINATION CONTROL AREAS. Outfitting equipment and supplies used in personnel decontamination should be stored in storerooms or lockers and taken to the decon station and CCA in accordance with Mission Oriented Protective Posture (MOPP) in anticipation of chemical or biological attack. See Section 8 for a brief description or NWP 3–20.31D, **Surface Ship Survivability**, for a full description of the MOPP system. The material requirements for CPS decon stations, conventional decon stations and CCA's are shown in Table 470–7–1. These requirements are based on processing 100 persons. The allowance equipage list (AEL) for CBR decontamination equipment specifies that a number of general use consumable items, such as detergent and plastic bags, are to be provided by the ship through GSK. Therefore, these items need not be stored with the supplies for the decon station and CCA but shall be issued as needed. This saves storage space and permits stock rotation. Note that special stowage requirements exist for Calcium Hypochlorite (see **NSTM Chapter 670, Stowage, Handling and Disposal of Hazardous General Use Consumables**).

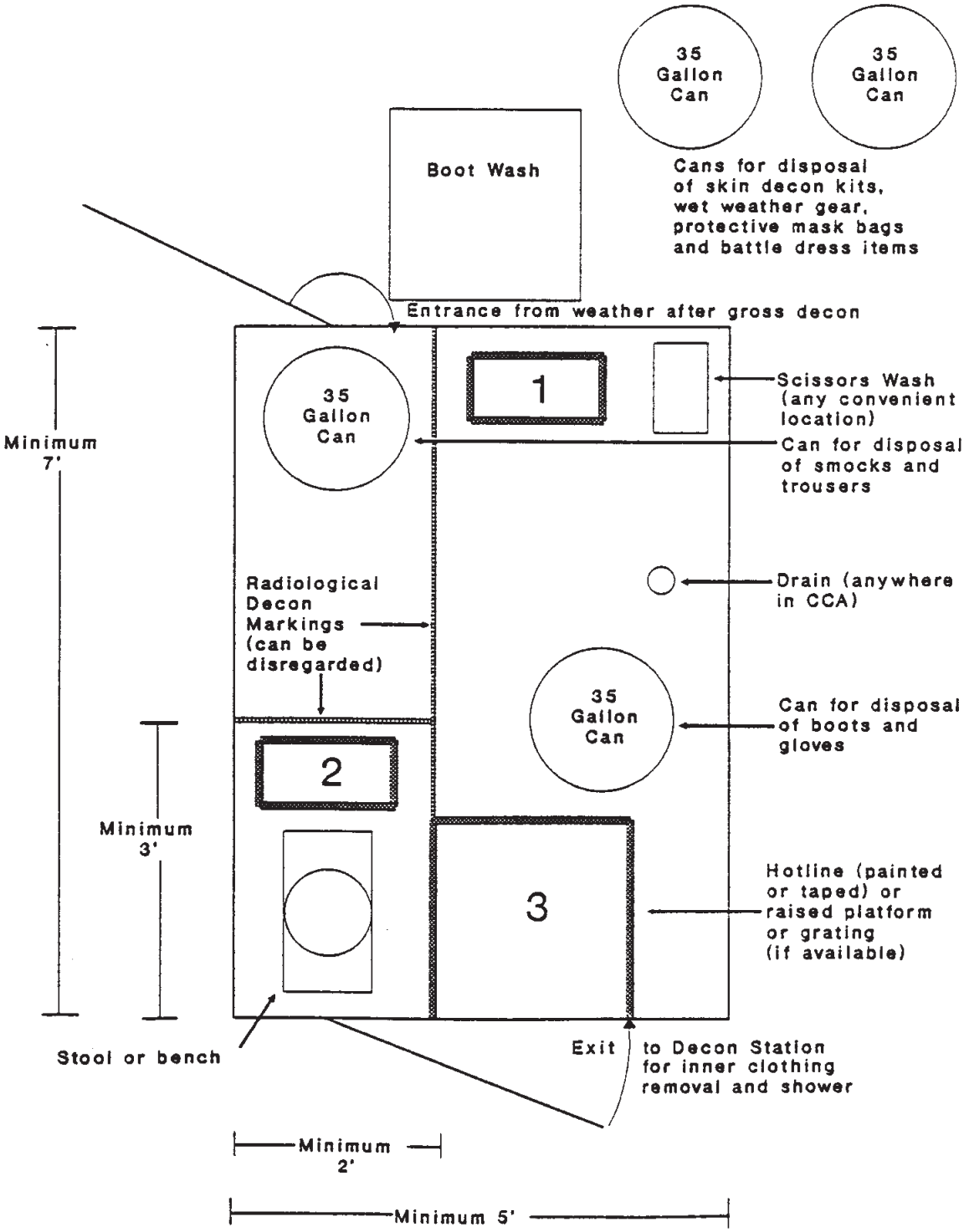

Figure 470–7–1. Generic Contamination Control Area (CCA) Layout for the One–Cutter Process

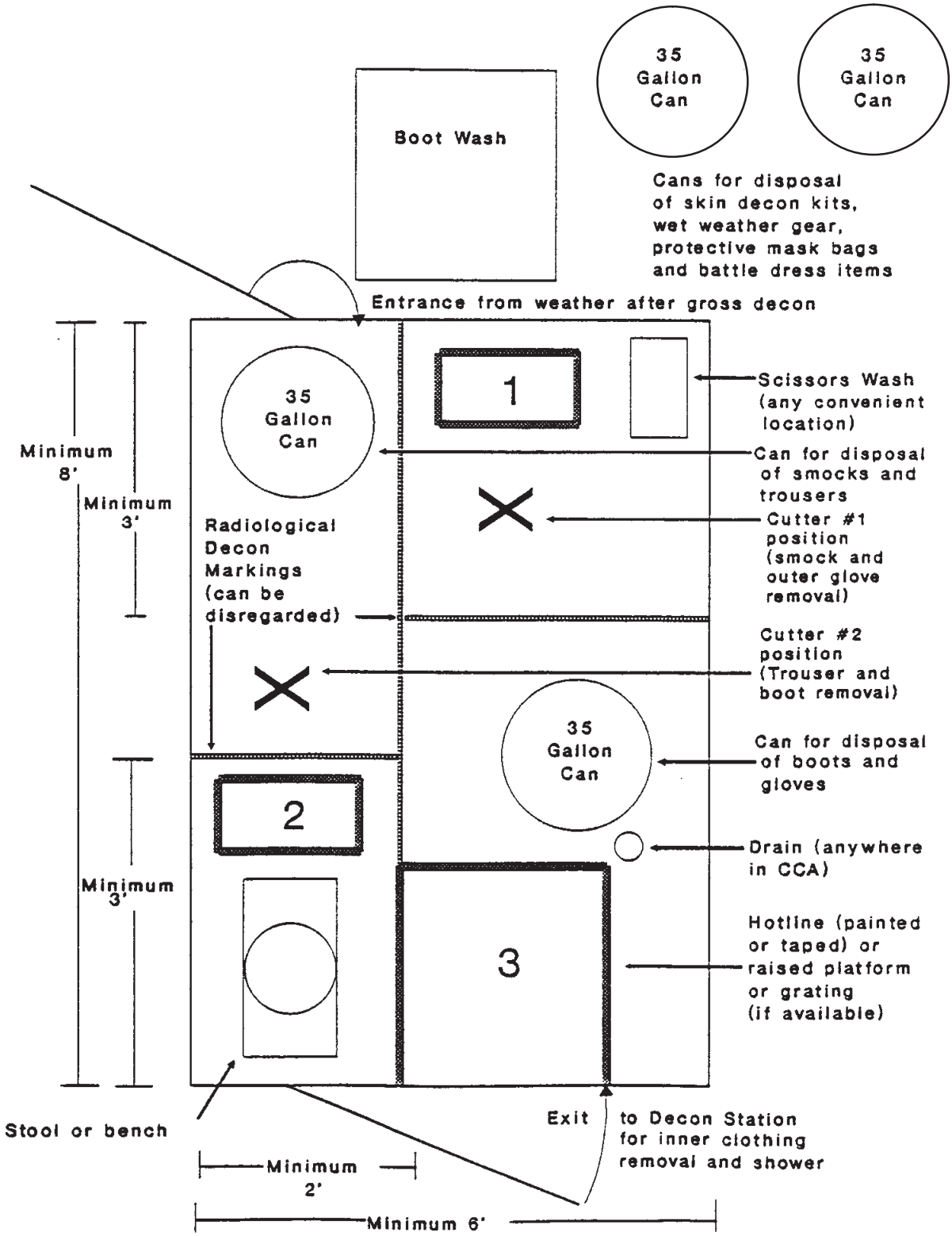

Figure 470–7–2. Generic Contamination Control Area (CCA) Layout for the Two–Cutter Process

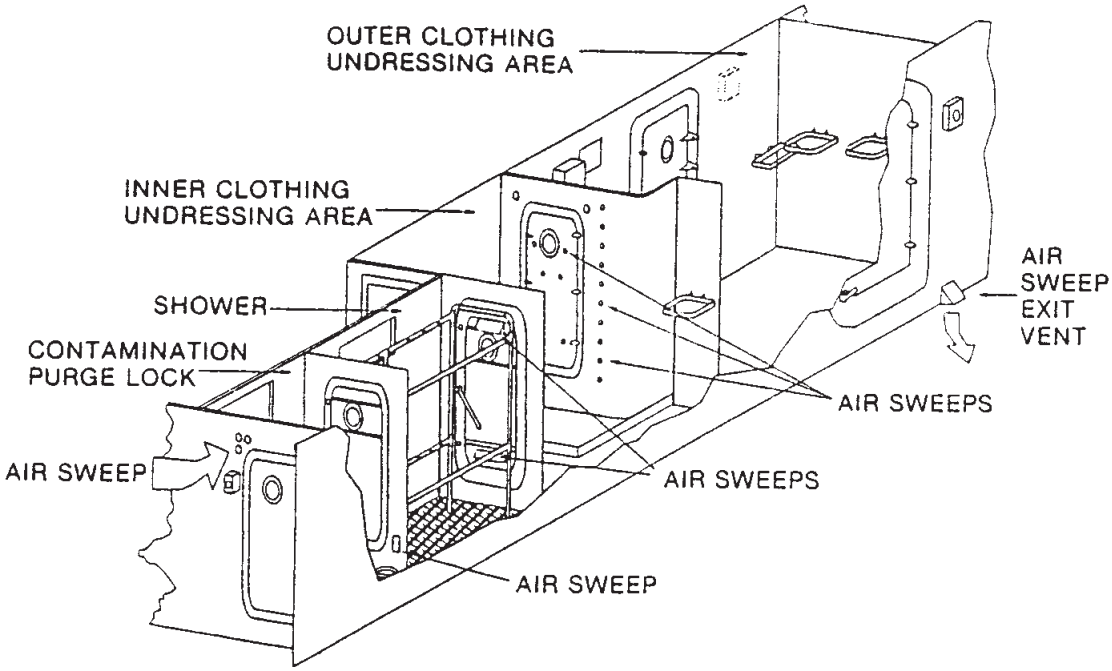

Figure 470–7–3. Typical CPS Decontamination Station

AVERAGE PROCESS RATE 10–16 PERSONS PER HOUR

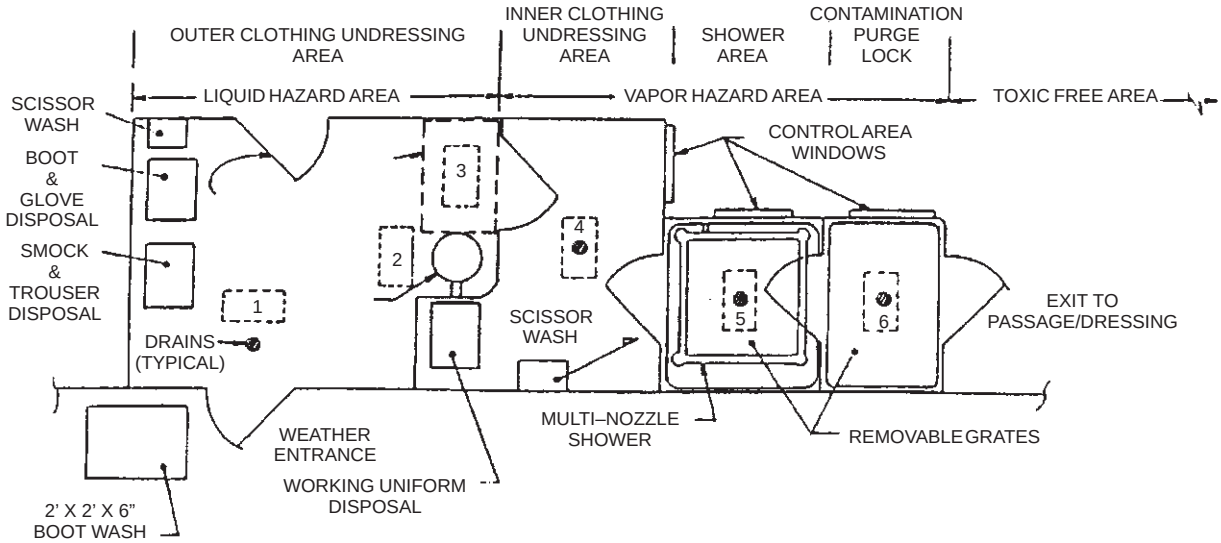

THE CONFIGURATION OF THE DECONTAMINATION STATION WILL VARY FROM SHIP TO SHIP

Figure 470–7–4. Typical CPS Decontamination Station Layout

Table 470–7–1. OUTFITTING FOR CHEMICAL DECONTAMINATION OF 100 INDIVIDUALS

Item	Stock Number (NSN)	Unit of Issue	Conv. Station	CCA	CPS Station
Calcium Hypochlorite	6810–00–255–0471	6 oz.		48	48
Metal Trash Cans 35 gal		each	1	4	2
Plastic Bags 55 gal	8105–01–183–9764	100		25 bags	25 bags
2’x 2’ X 6“ Bootwash tray				1	1
Utility Pails (5 gal)	7240–01–094–4305	each		2	2
Pan, Steam Table (scissors)	7310–00–576–4614	each		1	
Sponge, Cellular	7920–00–240–2555	each		3	3
Scissors, Bandage	6515–00–935–7138	dozen	2 ea.	10 ea.	12 ea.
Deck Brush, Scrub	7920–00–240–7171	each		3	3
Handle, Deck Brush	7920–00–141–5452	each		3	3
Boot Wash Brush	7920–00–255–7536	each		2	2
Gen. Purpose Detergent or Detergent Wetting Agent	7930–00–282–9699	gal		1	1
	6850–00–644–2008	50 lb		1	1
Measuring Cup (8oz)	7240–00–138–7983	each		1	1
M291 Kit	4230–01–276–1905	box		1	1
M8 Paper Booklets	6665–00–050–8529	each		4	4
M256A1 Kit	6665–01–016–8399	each	2		2
Bench or Stool				1	1
Twine 1 lb. Ball	4020–00–231–5870	each			
Tape, Press. Sensitive, Orange or Duct Tape, 2″	9390–00–656–1186 5640–00–103–2254	each each		1 1	
Bags, Plastic 10 gal	8105–01–183–9765		100		100
Towels		each	100		100
Soap, bars			10		10
Hose Assembly, 3/4“ ID	4720–00–230–6577	each			1
Nozzle, Hose Adjustable, 3/4“	4730–00–223–6731	each			1

470–7.2.3 EQUIPAGE AND CONSUMABLES USED IN CONTAMINATION CONTROL. Few of the items used in contamination control are dedicated to that purpose alone. Most have other shipboard applications that, in some cases, may be the primary uses. Firehoses are a good example of such equipage. None are allocated specifically to contamination control but they may be used for this purpose, as discussed in paragraph 470–7.4.1.3. Consumables that have other primary applications but are useful in contamination control include buckets, swabs and detergent. However, there are some items for which contamination control is the primary use.

470–7.2.3.1 Calcium Hypochlorite. Nearly all persistent agents can be decomposed by strong oxidizers. Calcium hypochlorite is the standard shipboard oxidizer for chemical decontamination. The minimum amount to be carried at all times is 192 six ounce bottles for air capable ships (amphibs and carriers) and 144 six ounce bottles for all other surface ships. A separate allowance is also carried for emergency water purification.

WARNING

In preparing the decontamination solutions, always add the calcium hypochlorite to the water, mix to dissolve, then add the detergent and stir thoroughly. Never add water to calcium hypochlorite or add calcium hypochlorite to water with which detergent has already been mixed. A dangerous reaction may result in either case.

470–7.2.3.1.1 Mixing Calcium Hypochlorite Solutions. Calcium hypochlorite is most effective in a solution with detergent. The detergent brings the agent into solution and, thus, in contact with the hypochlorite, where the chemical reaction can take place. Calcium hypochlorite will normally be used in a nine percent solution in water with 0.5 percent general purpose detergent. This concentration is effective for decontamination of heavily contaminated areas and for uses where the prepared solution is required for extended periods of time (such as the bootwash at the contamination control area). If supplies of calcium hypochlorite are limited, lower concentrations of three or five percent can be used. If general purpose detergent is not available, a variety of detergents or cleaning compounds may be substituted. Table 470–7–2 shows the amounts of hypochlorite and detergent needed to prepare various volumes of decontamination solution at different strengths (percents). It is recommended that copies of the table be reproduced as placards and posted at repair lockers and mixing or storage areas.

NOTE

General purpose liquid detergent, MIL–D–16791, NSN 7930–00–282–9699, is the standard shipboard detergent. If unavailable, detergent wetting agent or decontamination compound, NSN 6850–00–664–2008, or other detergent may be substituted.

470–7.2.3.1.2 Use of Lower Strength Concentrations. The first priority for use of calcium hypochlorite is in the CCA and in the decontamination of individual protective equipment. Thus, the first use of lower concentrations is in ship decontamination. In fact, solutions of detergent alone in sea water, without calcium hypochlorite, can be used for this purpose if necessary.

Table 470–7–2. NUMBER OF SIX OUNCE BOTTLES OF CALCIUM HYPOCHLORITE REQUIRED FOR SOLUTIONS OF VARIOUS STRENGTHS AND VOLUMES

	4 Gal.	**10 Gal.**	**20 Gal.**
1% Solution	1	2	4.5
3% Solution	3	7	14
5% Solution	5	12	24
9% Solution	9	22	44
Amount of Detergent	3 oz.	9 oz.	13 oz.

470–7.2.3.1.3 Shelf Life and Stowage of Calcium Hypochlorite. The shelf life of calcium hypochlorite is two years. An expiration date is printed on each bottle. It shall be stowed in accordance with **NSTM Chapter 670, Stowage, Handling and Disposal of Hazardous General Use Consumables.**

470–7.2.3.2 M291 Skin Decontamination Kit (SDK). The M291 SDK, which replaced the M258A1 kit, decontaminates liquid chemical agents from exposed skin areas by physical removal, absorption, and neutralization. Each kit consists of a wallet-like carrying pouch containing six sealed foil packets, enough for three complete skin applications. Each packet contains a folded applicator pad with a handle on one side. The pad is filled with the black decontaminating powder, a reactive and absorbent resin that is not toxic but may be slightly irritating to the skin or eyes. The M291 is small and rugged enough to be carried in a pocket on the CPO or ACPG or in the carrier for the MCU–2/P series mask. The unit of issue is a box containing 20 SDK's and one copy of Navy publication SS010–AA–MMO–010, **Operator's Manual Decontaminating Kit:M291**. Use of the M291 SDK is illustrated in Figure 470–7–5.

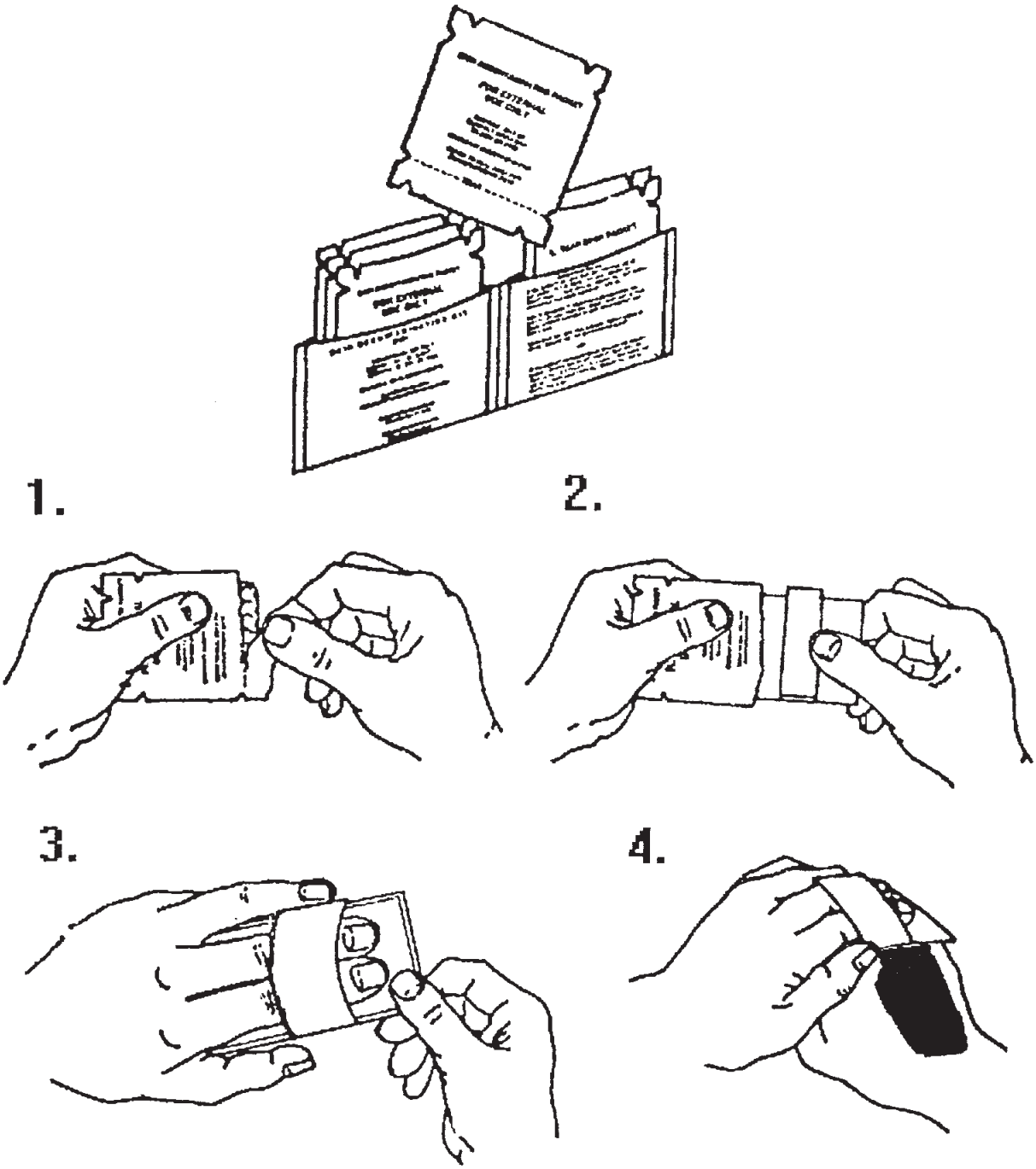

Figure 470–7–5. Use of the M291 Skin Decontaminating Kit (SDK)

WARNING

The M291 SDK is for external use only. Keep the decontaminating powder out of the eyes, cuts and wounds. It may be slightly irritating to the skin or eyes. Decontamination of exposed skin must be completed as quickly as possible, three minutes or less.

470–7.2.3.2.1 Use of the M291 SDK. The face, neck and hands can be decontaminated with one or two packets, depending on the amount of exposed skin. Each decontamination with two packets covers a minimum of 200 square inches, or 1300 square centimeters, of skin. It can be used to decontaminate individual equipment items such as the protective mask and gloves. The M291 is also used for training as it contains no toxic chemicals. Although the powder may be slightly irritating to the skin, it does not matter how long the powder stays on the skin. It can be removed with soap and water when operational conditions permit. Instructions for use are printed on each kit, each packet in the kit and in the operator's manual. The following condensation of the operating instructions is provided for convenience.

a. Tear open a skin decontamination packet at the tear line and remove the pad.

b. Unfold the pad and place two fingers inside the strap with the pad on the inside of the hand.

c. Thoroughly scrub the contaminated area until it is covered with black powder.

d. Discard the pad when the powder is expended.

470–7.2.3.2.2 Stowage and Issue of the M291 SDK**.** The M291 SDK can be stored at temperatures from –60°F to 160°F (operating temperature is –50°F to 120°F). Shelf life is five years, extendable. To determine the expiration date, add five years to the year indicated in the ammunition lot number stamped in the seal at the top of the package. When operational conditions require issue of M291 kits to individuals, each person shall inspect the kit for loose powder. Leaking packets shall be discarded. If there are fewer than four packets remaining in the kit, an additional kit shall be issued to that individual.

470–7.2.3.3 Contamination Marking Kit. After a detailed survey establishes the locations where contamination has been deposited on the ship, the boundaries of these areas are roped off with lines and signs. The signs are made locally from a rigid material such as sheet metal. Do not order the Army's NBC contamination marking set. It contains flags and mounting stakes that are not appropriate for shipboard use. The signs shall conform to NATO guidance in shape, size, color and markings. Each sign is an isosceles triangle with a base of 11.5 inches (28 centimeters) and sides of eight inches (20 centimeters). The base of the triangle (the 11.5 inch side) is the top of the sign. The sign for chemical contamination is yellow with the word, **GAS**, in red capital letters, at the top. The sign for biological contamination is blue with the word, **BIO**, in red capital letters, at the top. The use of the signs is described in paragraph 470–7.3.5. Grease pencils shall be available with the marking kit for recording the information on the signs that is required by paragraph 470–7.3.5. Each repair locker shall have a minimum of ten of each type of sign and a 1 lb ball of twine. The Contamination Marking Kit also contains signs for marking radiological contamination and unexploded ordnance. The kit is shown in Figure 470–7–6, with color designators given in Table 470–7–3.

470–7.3 CONTAMINATION AVOIDANCE

470–7.3.1 GENERAL COMMENTS ON CONTAMINATION AVOIDANCE. The purpose of contamination avoidance is to evade exposure to chemical and biological contamination or, if that is not possible, to minimize exposure.

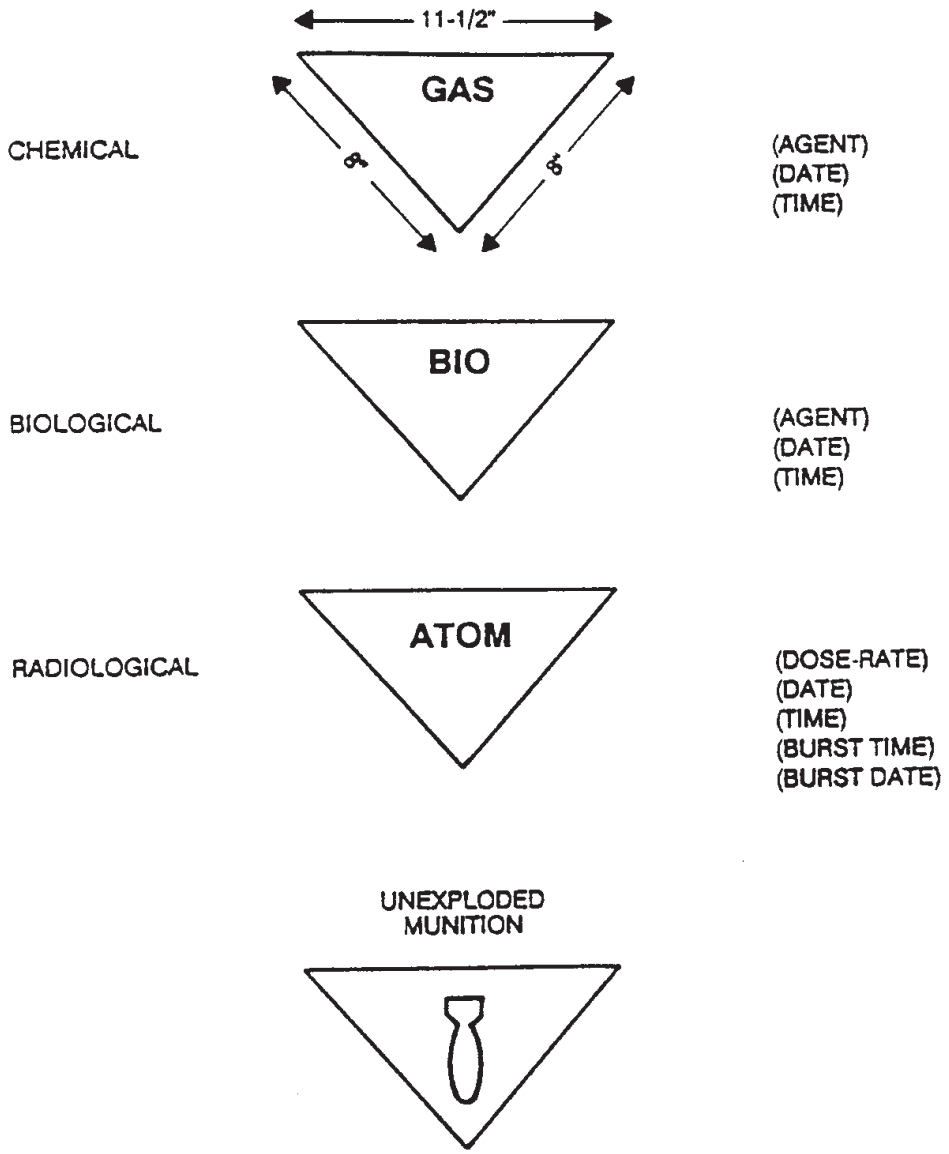

Figure 470–7–6. Contamination Marking Kit

Table 470–7–3. COLORS USED IN CONTAMINATION MARKINGS

Danger	Primary Color	Secondary Color	
		Markings	Inscriptions
Radiological Area	White	ATOM	Black
Biological Area	Blue	BIO	Red
Chemical Area	Yellow	GAS	Red
Unexploded Munitions	Red	White (bomb)	None

470–7.3.2 EVASIVE MANEUVERING. A ship may be able to maneuver to avoid exposure to chemical or biological contamination if the location of the agent, both current and projected, is known. The location of chemical or biological attacks can be obtained from intelligence sources, reports from other ships or, for certain chemical agents, from the ship's own standoff detector. Use of the Chemical Warfare Directional Detector (CWDD) for this purpose is discussed in paragraph 470–7.3.2.1. From the location of the release of a **nonpersistent chemical** agent, a downwind hazard area can be predicted using abbreviated techniques from NWP 3–20.31D or more detailed procedures from ATP 45, **Reporting Nuclear Detonations, Biological and Chemical Attacks and Predicting and Warning of Associated Hazards and Hazard Areas**. In both publications, the hazard areas for persistent chemical agents are standard assumptions that do not change with different environmental conditions. Neither publication provides predictive procedures for biological agents. More sophisticated predictions are possible with the Chemical-Biological Agent Vapor, Liquid and Solid Tracking (VLSTRACK) Computer Model, discussed in paragraph 470–7.3.2.2. VLSTRACK can predict hazard areas for both chemical and biological agents in any physical state. Whatever the source of the information, the ship can be steered to stay out of downwind hazard areas if the operational situation permits.

470–7.3.2.1 Shipboard Standoff Chemical Agent Detector. The Chemical Warfare Directional Detector (CWDD), AN/KAS–1, described in paragraph 470–4.2.2, is the current shipboard standoff detector for chemical agents. It can provide only relative bearing information on clouds of nerve agent. A cloud can be tracked to see if there is any bearing drift, that is, constant change in the true bearing of the cloud. This procedure requires conversion of the relative bearing information from the CWDD to true bearings. If the true bearing is changing, then the cloud is not moving directly at the ship. If the true bearing is not changing and if the true wind is blowing from the direction of the cloud, the ship may be able to maneuver to cause bearing drift to develop. Alternatively, it may be possible to estimate the geographical position of the cloud in order to predict a downwind hazard area. To obtain a position relative to the ship it is necessary to estimate the range to the release point of the agent based on radar or unaided visual observation of the delivery system at the approximate time of release, such as bursting munitions or an aircraft with a spray tank. This relative position can then be converted to a geographical location, from which a downwind hazard area can be predicted using one of the methods discussed in paragraph 470–7.3.2.

470–7.3.2.2 VLSTRACK. The Chemical-Biological Agent Vapor, Liquid and Solid Tracking (VLSTRACK) Computer Model can display predicted geographical patterns of agent deposition, persistence or dosage. Outputs are provided either as cumulative hazards from the time of the attack or periodic hazards for each of several time periods. Outputs can be provided as either quick estimates, produced in minutes, or as the results of rigorous calculations, which can take an hour or more to produce. VLS TRACK can perform these functions for CB agents in any physical state. Inputs needed are the location of the attack, the identity of the agent, weather conditions and weapon type. VLSTRACK is being developed as a module in the Tactical Environmental Support System (TESS), which is planned for installation on aircraft carriers and large amphibious ships.

470–7.3.3 PREWETTING. The countermeasures washdown system is most effective when operating in advance of and during the arrival of liquid or solid chemical or biological agent. When used before and during agent deposition, it can significantly reduce the amount of persistent agent that remains on the ship. This can reduce the weathering times of liquid chemical agents, as shown in Appendix C. It is less effective when activated after the chemical agent has been deposited, and even less so after liquid agent has had time to soak into paint or nonskid deck coating. Biological agents do not soak into paint and nonskid like chemical agents. Nonetheless, the washdown system is more effective in removing biological contamination if used for prewetting and during the arrival of the agent rather than turning it on after the agent has been deposited. For both chemical and biological agents, the washdown system can be operated intermittently during prewetting, if necessary, but, for best results, should be in operation at the time the agent arrives.

470–7.3.4 PROTECTIVE COVERS. Temporary covers may be used to prevent deck loads such as cargo, boats, aircraft and vehicles from becoming contaminated. Covers of impermeable material are preferable because they are easier to decontaminate. Plastic sheeting is an excellent choice if it is strong enough and if it can be secured in a way that it cannot be torn by wind. Canvas is not a good choice, as it is permeable and liquid chemical agent can soak into it, creating a contact hazard that is difficult or impossible to decontaminate. It may be necessary to discard canvas after one exposure to liquid chemical agent. If sufficient material is not available to cover an object completely, exterior seats, controls, handles and air intakes should be covered. Care must be taken during the

removal of covers to avoid transferring contamination to the material or equipment underneath. It may be desirable to decontaminate the covers in place before removal.

470–7.3.5 ISOLATION OF CONTAMINATION. After surveys are conducted to determine the location of contamination, contaminated areas shall be isolated and marked with signs described in paragraph 470–7.2.3.3. The triangular signs shall be hung within sight of each other with the apexes down and the front (inscribed) surface facing outward from the contaminated area. The name of the agent (if known), and the date and time the contamination arrived shall be written in grease pencil on the signs. Access to these areas shall be limited based on operational necessity. All personnel who enter contaminated areas shall reenter the ship through the nearest operational CCA or decon station and go through the personnel decon process as described in paragraph 470–7.5.3.

470–7.3.5.1 Isolation of Chemical Contamination. Chemical monitoring and survey procedures are described in paragraph 470–4.4.1. Signs are not hung during the rapid internal and external surveys, when the emphasis is on quickly collecting information about contamination at vital stations. Rather, signs are hung during detailed surveys.

470–7.3.5.2 Isolation of Biological Contamination. Biological surveys are discussed in paragraph 470–4.6.1. Survey locations for biological samples are based, not on their operational importance, but on the likelihood of finding viable samples. Currently, the samples have to be sent off the ship for analysis. Therefore, signs for biological contamination would be hung after results are received if any persistent hazards are identified.

470–7.3.6 GOOD HYGIENE AND HOUSEKEEPING. Personal sanitation and general housekeeping are very important when a ship is operating in a chemical or biological threat area. It is extremely difficult to keep all contamination out of the interior of the ship. The ship is not airtight and, unless it has a collective protection system, some aerosol particles will enter the ship through the ventilation system, through accesses or through leaks in the superstructure. It is possible that some contamination will be carried inside the ship by personnel returning from topside duties in spite of the best efforts to locate and remove contamination from their clothing and equipment. Personnel monitoring and decontamination techniques are not perfect. Neither are contamination monitoring techniques. It is impossible to delineate the location of **all** contamination. However, the hazard can be minimized simply by preventing it from building up. Maintaining clean conditions in living and working spaces is one part of the solution. The other is personal cleanliness. A simple practice such as washing one's hands before eating will reduce the likelihood of ingesting contamination.

470–7.4 SHIP DECONTAMINATION

470–7.4.1 GENERAL COMMENTS ON SHIP DECONTAMINATION. The subordinate paragraphs that follow discuss the methods available to decontaminate persistent chemical and biological agents. They should be used in accordance with the risk management concepts in NWP 3–20.31D. The basic decontamination methods, physical removal, chemical neutralization and natural decay, were described in paragraph 470–7.1.4. The specific methods discussed here are either forms of or combinations of the basic methods.

NOTE

The longer liquid chemical agent is allowed to sorb into alkyd paint or non-skid deck coating, the less effective are physical removal and chemical neutralization. However, as coatings age, the less they tend to sorb agent. This extends the time during which active decontamination measures can be effective. It may also increase the speed of weathering.

WARNING

If weathering is the decontamination option chosen, topside evolutions must be delayed until the hazard has decayed to a safe level or all personnel going topside must wear individual protective equipment.

470–7.4.1.1 Weathering. Weathering is the gradual reduction of a persistent hazard due to the effects of the environment. It is passive decontamination, requiring no expenditure of manpower or material. Evaporation is the

primary mechanism for natural decay of a chemical hazard. It may occur as the liquid chemical agent is lying on a surface or as it desorbs from some material into which it was previously sorbed. Desorption proceeds quickly at first, then the rate slows considerably. It is important to remember that the agent vapor that results from weathering is harmful if its concentration is high enough. A number of environmental influences, described in paragraph 470–3.4.3, cause natural decay of biological agents. Weathering is normally a part of any decontamination operation because active methods cannot reach all the agent that is deposited on the ship. More information on weathering of chemical agents is provided in Appendix C.

WARNING

In any active decontamination operation, personnel working in proximity should wear protective clothing and masks until the area has been declared safe by the Damage Control Assistant.

CAUTION

Physical removal methods involving the use of water without oxidizers may dilute the concentration of agent but do not change their toxic properties. Therefore, care must be taken to ensure that spray, runoff and disposal methods do not simply move contamination to other parts of the ship.

470–7.4.1.2 Washdown. Use of the Countermeasures Washdown (CMWD) system is a form of active decontamination by physical removal. It is the best active decontamination option in three respects.

a. It requires the least expenditure of manpower to operate.

b. It can be activated easily and quickly and it covers all, or nearly all, of the ship's weather surfaces at once, allowing liquid agent the least time to sorb into paint or non-skid.

c. It is highly effective in physical removal of contamination. It is most effective when used for prewetting before the arrival of agent and then left on during and after agent deposition. However, it is still an effective decontamination system, even when it is not activated until after the agent has been deposited.

470–7.4.1.2.1 The maximum time the CMWD should be operated **after** deposition of agent has ceased is 15 minutes. The rate of removal of agent by the CMWD after 15 minutes of operation is essentially the same as that of weathering. This time limit does not apply to prewetting since the exact time of the attack is not known beforehand.

470–7.4.1.2.2 Dry aerosols do not sorb into paint and non-skid coatings like liquid agents do. Although it is better to prevent them from being deposited at all, most particles can be removed by operating the washdown system after deposition.

470–7.4.1.2.3 In spite of the advantages of using the CMWD over other active decontamination methods, it can severely impact certain types of operations, such as flight ops. In this case, other options must be considered. One option on some ships is to use the countermeasures washdown system in limited areas and other methods elsewhere.

470–7.4.1.3 Firehosing. Firehosing is a form of active decontamination by physical removal. It may be used in addition to or instead of washdown.

a. There may be areas where the runoff water from the CMWD flows very slowly, or collects in pools, especially if the tactical situation prevents steering a sinuous course, discussed in paragraph 470–7.2.1.1. There may be dry spots as well. Repair locker personnel shall take note of these locations during washdown drills. The Damage Control Assistant may identify them in the CBR Defense Bill, especially if they are at vital stations.

b. If the operational situation prevents using the CMWD, firehosing can be used alone for either general or selective area decontamination or it can be used in combination with scrubbing and swabbing for selected area

decon. When used with scrubbing and swabbing, the area is prewet by firehosing, then scrubbed and swabbed, then rinsed by firehosing.

c. Agents that adhere strongly to shipboard surfaces, such as thickened types, may require a strong stream from a firehose, or even scrubbing, to remove them.

470–7.4.1.3.1 The hose stream is most effective when projected well in advance of the nozzle so that there is little or no splash or rebound of the hose stream from the surface being decontaminated. It is emphasized that splashing of contaminant-bearing water can be a serious hazard to decontamination personnel or to anyone downwind of the hosing operation. Safety precautions of paragraph 470–7.4.4 shall be followed during firehosing.

470–7.4.1.3.2 Firehosing shall proceed top to bottom and forward to aft with emphasis on the following areas.

a. For chemical agents:

1. All decks and horizontal surfaces.

2. Vertical surfaces facing the relative wind.

b. For biological agents:

1. All small-diameter cylinders such as lines, halyards, ropes, and handles.

2. All surfaces close to edges, corners, and protruding fittings.

470–7.4.1.4 Scrubbing and Swabbing. Scrubbing and swabbing are forms of active decontamination by physical removal and, if calcium hypochlorite is used, chemical neutralization. This option is available for decontamination of small areas. It is usually limited to vital stations and the routes to them due to manpower, material, and time constraints. There are also locations on the ship where the use of the CMWD and firehosing are impractical, for example, near aircraft or inside the ship. In these cases, scrubbing and swabbing are the only options.

470–7.4.1.4.1 A solution of calcium hypochlorite and detergent or other soap is used in scrubbing and swabbing. Normally, a nine percent solution in sea water is used, but a three or five percent solution can be mixed if calcium hypochlorite is in short supply. Directions for mixing solutions of various strengths are provided in Table 470–7–2. If calcium hypochlorite is unavailable, laundry bleach can be used as a substitute. The pattern of swabbing is top to bottom, forward to aft. The minimum amount of decontamination solution that will adequately cleanse the area should be used. Brisk rubbing and scrubbing should be used to mix the agent thoroughly with the oxidizer so chemical neutralization can proceed more quickly. After an area is scrubbed and swabbed with calcium hypochlorite solution or a detergent solution, the area shall be rinsed by scrubbing and swabbing with sea water or fresh water.

470–7.4.1.4.2 If calcium hypochlorite is unavailable and detergent must be used alone, scrubbing and swabbing will only result in physical removal of the agent, not detoxification. The detergent will assist in bringing the agent into solution. The resulting solution contains toxic agent and shall be washed overboard by firehosing. In areas where firehosing is not possible, repeated rinsing with buckets and swabs using clean sea water are necessary to remove this toxic solution.

470–7.4.1.5 Degreasers and Cleaning Solvents. Harsh detergents and oxidizers cannot be used to decontaminate electronic systems and aircraft without risking damage to the equipment. The materials normally used in maintenance and corrosion control on such systems shall be used instead, exercising care to avoid contact with the runoff or other residue. This is because the toxic properties of the agent are not changed by physical removal methods. The residue or runoff is still toxic.

470–7.4.1.6 Decontamination of Ventilation Filters. Ventilation filters may require decontamination after a chemical attack. Normal filter cleaning procedures may be used except that a 9 percent calcium hypochlorite solution shall be used. Adequate ventilation shall be provided.

470–7.4.2 GENERAL COMMENTS ON SHIP DECONTAMINATION – BIOLOGICAL. The same systems, material and procedures that are used for ship decontamination for chemical agents are also effective against biological contamination. However, it is possible that a biological attack will not be recognized as such and that the agent will be gone from the environment before its presence is known. Pathogens can be killed by heat, drying, starvation and exposure to sunlight. There may be no occasion to use active decontamination measures.

470–7.4.2.1 Procedures After a Possible Biological Attack. If an attack with a biological agent is suspected, the countermeasures washdown system should be operated for 15 minutes. Extra vigilance to standard shipboard sanitation and housekeeping practices will inhibit the spread of BW pathogens. The Medical Department can implement infection control measures. NAVMED P–5059, **NATO Handbook on Medical Aspects of NBC Warfare**, provides guidance. Special consideration should be given to food and water supplies and ventilation filters. Other than that, until better shipboard detection methods are available, it is not possible to say with certainty that other decontamination actions are necessary or effective.

470–7.4.2.2 Special Considerations for Spores. The major exception to the foregoing discussion on biological agent decontamination is a pathogen that can exist as a spore, such as anthrax. Spores can survive for long periods of time in a wide range of environmental conditions. If such a pathogen is causing disease among a large number of crew members, large scale ship decontamination should be considered.

470–7.4.3 MANNING FOR SHIP DECONTAMINATION. Ship decontamination teams shall be assigned to each repair locker. They shall consist of seven to nine personnel with the following responsibilities.

a. Team Leader, who coordinates the actions of the team to ensure that its efforts support the decontamination plan and that they are not counterproductive or duplicative. The team leader also ensures compliance with the safety rules in paragraph 470–7.4.4.

b. Two teams of two hose handlers each are assigned to inch and a half hoses.

c. Four to six scrubbers, who can also serve on hose teams if needed.

470–7.4.4 SAFETY PRECAUTIONS FOR SHIP DECONTAMINATION

a. For decontamination with the washdown system or detergents, in the absence of oxidizer, the contaminants are not chemically neutralized and remain toxic. The possibility exists that the agent-contaminated water may drain or flow in such a way that contamination remains on the ship. Decontamination operations should be planned and conducted so that most of the run-off flows into the sea and that areas of heavy traffic and sensitive areas are not re-contaminated. Care should be taken to minimize spraying or splashing of the contaminated liquid.

b. Full chemical protective clothing shall be worn, and those personnel who might be exposed to contaminated spray should wear wet weather gear over the CPO. However, wearing wet weather clothing will dramatically increase heat stress. This factor shall be taken into consideration when planning decontamination efforts.

c. No decontaminated surface should be assumed to be completely free of chemical hazard until suitable tests, described in Section 4, are negative. Traces of agent will often remain trapped in crevices or absorbed in paint even after treatment with an oxidizer. Weather will reduce contamination over time.

d. Most shipboard surfaces can be safely treated with the standard hypochlorite and detergent solution. It shall not, however, be used on aircraft, ordnance material or electronic instruments because of the risk of corrosion damage.

e. DS2, an oxidizer used by the other armed services for decontamination, shall not be substituted for calcium hypochlorite in shipboard decontamination. Its use is prohibited aboard ship.

f. Pure, undiluted calcium hypochlorite burns in contact with many organic compounds, including petroleum products and some chemical agents. Calcium hypochlorite powder shall be added to water before being used in ship decontamination. The powder shall not be scattered on shipboard surfaces. See paragraph 470–7.2.3.1.1 for mixing instructions and **NSTM Chapter 670** for stowage instructions.

470–7.5 DECONTAMINATION OF PERSONNEL

470–7.5.1 GENERAL COMMENTS ON PERSONNEL DECONTAMINATION. The personnel decontamination process is at the heart of contamination control. Strict observance of these procedures minimizes the amount of contamination that reaches the interior of the ship.

470–7.5.2 EMERGENCY PERSONNEL DECONTAMINATION – CHEMICAL. If individuals who are not wearing a complete chemical protective ensemble are exposed to liquid chemical agents, it is necessary to perform emergency personnel decontamination procedures immediately to remove liquid agent from their skin or eyes.

470–7.5.2.1 Emergency Skin Decontamination. If the contamination is deposited on the skin during an attack, a mask shall be donned, overhead protection sought and skin decontamination procedures begun at once. If the contamination is the result of a post-attack transfer from a surface contact hazard, the individual shall immediately cease other activities and begin skin decontamination procedures. M291 skin decontamination kits are available for this purpose. Their use is described in paragraph 470–7.2.3.2.1.

470–7.5.2.2 Emergency Decontamination of the Eyes. Following contamination of the eye with any chemical agent, the agent shall be removed immediately. If an individual suspects contamination in the eyes or on the face, the person shall immediately leave the contaminated area if possible. If it is not possible to leave the area because of the operational situation, the individual shall seek overhead cover if an attack is ongoing.

1. Obtain clean, uncontaminated water from a known source. **Never use the M291 kit in the eyes** as it is irritating to the eyes. Since the ship will probably be at general quarters with material condition ZEBRA set, it will probably be necessary to use water from a canteen at the individual's general quarters station.

2. Take a deep breath of filtered air and hold it (keeping mouth closed).

3. Loosen the cheek straps on the mask, break the seal on the mask but do not remove the mask. Place one hand between the mask and face to hold open eyelids and keep the mask away from the face.

4. Flush or irrigate the eyes immediately with the clean water by tilting the head to the side, pulling the eyelids apart with the fingers and pouring water slowly into the eye so that it will run off the side of the face to avoid spread of the contamination. This irrigation shall be carried out despite the presence of toxic vapors in the atmosphere. The breath should be held as long as possible and the mouth kept closed during this procedure to prevent contamination and absorption through mucous membranes. The risk of leaving unknown toxic agents in the eyes is much greater than from exposure to vapors, so decontamination of the eye shall be performed before resealing the mask.

5. **When the breath can no longer be held, remove the hand from behind the mask and with the palm of the hand cover the outlet valve assembly and push the mask against the face to make a seal. Exhale sharply to purge the mask of contamination by forcing it out around the seal. Uncover the outlet valve assembly but maintain the pressure on the mask to keep a seal. Resume breathing, repeat this procedure until the eyes have been flushed.**

6. When the eyes have been thoroughly flushed use M291 wipes to decontaminate both the face and that portion of the mask which has come into contact with the facial contamination. Reseal the mask and seek medical treatment.

470–7.5.3 CHEMICAL DECONTAMINATION PROCEDURES FOR PERSONNEL IN A CONVENTIONAL DECONTAMINATION STATION. The basic functions in the personnel decontamination

process, described in paragraph 470–7.1.5, are performed in the following locations in conventional decontamination stations and contamination control areas (CCA's). Stage 1, gross decontamination, takes place outside the ship because of the danger of spreading liquid contamination into the ship. Stage 2, removal of contaminated outer clothing, shall be done as close to the point of entry from the weather deck as possible. With a conventional decon station, this function is performed in a CCA, which may be collocated with the decon station if it has an entrance from the weather deck and sufficient room. If not, a separate CCA is set up for this purpose. Stage 3, removal of inner clothing, and stage 4, showering, are performed in the conventional decon station. Stage 5, medical review, is performed at the CCA exit except when the CCA and the decon station are collocated. Then, it is performed at the exit from the decon station.

470–7.5.3.1 Manning in a Conventional Decontamination Station and CCA. Personnel decon teams shall be assigned to each CCA/decon station. They will consist of four to five personnel (depending on whether a one–cutter or two–cutter process is used) with the following responsibilities:

a. Team leader posted outside the entrance, to direct exposed personnel in removal of battle dress equipment, use of the M291 kit to decon mask and gloves, and stepping into the bootwash. The team leader also ensures that personnel enter the CCA in an organized manner.

b. One or two cutters posted in the CCA to doff protective clothing from exposed personnel and instruct them in the proper procedures during processing. Relief cutters shall be readily available.

c. A Hospital Corpsman or a medically trained person posted at the inboard side of the CCA exit, to diagnose symptoms of agent exposure and heat stress and take appropriate action. Also directs personnel to decon station or casualty collection stations (CCS) and arranges for relief of cutter(s).

d. One monitor at decon station to direct personnel through the station and perform periodic checks of the area with the M256 kit. The monitor shall assist in the removal of pullover shirts as described in paragraph 470–7.5.3.7, step a, if necessary.

A second personnel decon team shall be standing by ready to don protective clothing and relieve the first team, if warranted by the number of personnel expected to be processed through the CCA.

470–7.5.3.2 Activating a Conventional Decontamination Station or CCA. To prepare for decon, the personnel decon team moves all equipment and supplies from the lockers and storerooms in which it is kept to the CCA. The team dresses in full chemical protective ensemble (the decon station monitor does not have to don CPE unless the decon station and CCA are collocated). In warm or hot weather, the team shall drink as much water as possible before starting to provide some protection against heat stress. If liquid agent is confirmed or suspected in the CCA (especially if the CCA is located on a weather deck or in a hangar bay), the personnel decon team will decontaminate the CCA by cleansing with a 9 percent solution of calcium hypochlorite in sea water. The bootwash, mask lens wash, scissors wash and trash cans lined with plastic bags are placed in the locations specified in paragraph 470–7.2.1.2. Ten pairs of scissors are placed in the CCA scissors wash, two in the decon station for removing tee shirts and flight deck jerseys. The preferred location for the bootwash is outside the CCA, directly in front of the door. Pails with any extra calcium hypochlorite solution are set aside in the CCA. Scrub the exterior grab handle and lever, handwheel and dogs of the door briskly with 9 percent calcium hypochlorite solution.

470–7.5.3.3 Preparing Calcium Hypochlorite Solutions. Calcium hypochlorite solutions are prepared in accordance with paragraph 470–7.2.3.1.1 as follows by personnel wearing CBR protective gear:

a. Bootwash: Fill 2'x2'x6" tray with approximately 4" of sea water (about 10 gallons). Add 22 – six ounce bottles of calcium hypochlorite, for a 9 percent solution, and stir. Add nine ounces of detergent and stir again. Tray location: outside of the CCA entrance directly in front of the door.

NOTE

Some calcium hypochlorite will settle to the bottom, especially in the 9 percent solution. These solutions remain effective for processing of about 100 personnel, or about six hours of continuous personnel processing. If fewer personnel are processed, the solutions remain effective longer.

b. Mask Lens wash. Fill one of the five gallon pails with about two gallons of **fresh** water. Add approximately three ounces (half of a six ounce bottle) of calcium hypochlorite, to make a 1 percent solution, and stir, add three sponges. Container location: outside CCA entrance.

NOTE

Do not use salt water for mask lens wash as it may scratch the mask lens.

c. Scissors wash: Fill a five gallon pail with about 2 1/2 gallons of sea water. Add five – six ounce bottles of calcium hypochlorite to make a 9 percent solution and stir. Add two ounces of detergent. Transfer a portion of this to the shallow pan, which is provided for ease in recovering scissors. Pan location: inside CCA.

d. CCA Cleaning solution. Fill a five gallon pail with four gallons of water. Add nine – six ounce bottles of calcium hypochlorite to make a 9 percent solution and stir. If calcium hypochlorite is in short supply, add only five – six ounce bottles of calcium hypochlorite to make a 5 percent solution. Add four ounces of detergent. Pail location: inside CCA.

WARNING

In the absence of a reliable way to monitor contamination on personnel or their clothing and protective equipment all personnel on the weather decks in a chemically contaminated environment shall reenter the ship through a CCA and go through the entire personnel decontamination process. Everyone who has gone outside after a chemical attack is considered contaminated.

WARNING

Chemical Protective Overgarments should never be hosed down or subjected to showering, since they are permeable and contamination can be transferred to the skin. In a chemical environment, external showers, if available, should only be used for contaminated personnel who are not wearing the CPO.

470–7.5.3.4 Gross Personnel Decontamination Procedures. The CCA team leader directs personnel to remove all load bearing gear, battle dress items, wet weather gear, flight deck safety equipment and load bearing gear such as the mask carrier and canteen belt and place them in a plastic bag in the trash can outside the CCA. Personnel being decontaminated are divided into pairs to assist each other. Personnel shall perform the buddy system to decontaminate each other's mask and gloves using the M291 skin decon kit as follows:

a. Each doffee removes one packet from his M291 kit in the pocket of the smock along with the unused atropine injectors, 2–PAM chloride, injectors and Nerve Agent Pre–treatment Pyridostigmine (NAPP). The doffee opens the packet and decontaminates the outside of the medical self–aid items and places them in the plastic bag in the designated trash can outside the CCA. Each doffee also decontaminates the fingertips of his gloves in preparation for the next step.

b. The doffee removes a second packet from his M291 kit, opens it and decontaminates all exposed areas of his buddy's mask and then his own gloves. If an outsert is attached to the mask, it is **not** to be removed from the mask. **The buddy shall place two fingers on the mask voicemitter during this procedure to prevent breaking the mask seal**.

c. The buddy opens a second packet from his M291 kit and decons the first doffee's mask and then his own gloves. Again, the outsert is **not** to be removed. **The doffee shall place two fingers on the mask voicemitter during this procedure to prevent breaking the mask seal**.

d. If the black resin on the mask lens (or outsert, if one is attached) makes vision difficult, a sponge dipped in 1 percent calcium hypochlorite solution from the mask lens wash pail and wrung out to prevent drips may be used on the lens to remove the resin. **Do not let the solution drip from mask as it may contaminate the neck area**.

e. If a contaminated surface is touched, personnel shall again use the decon kit.

470–7.5.3.5 Proceeding Through the Contamination Control Area for Removal of CPO. After completing gross decontamination, individuals proceed through the CCA when directed.

WARNING

CCA door may be kept open for short periods of time to allow accumulated agent vapors to dissipate to the weather. CCA door shall not be opened while ship is enveloped in primary vapor. When outer door is open, the inboard door shall remain closed.

WARNING

If there is concern about secondary vapor, time that CCA door is open may be minimized by having doffee complete bootwash before opening CCA door. This requires angling position of bootwash so CCA door can be opened without hitting doffee standing in bootwash and doffee can still step directly from bootwash into CCA.

a. When door to CCA is open and cutter signals ready, doffee steps into bootwash and gently scrubs his boots with brush for approximately 10 seconds. Doffee then enters CCA without touching door with his gloves, which have already been decontaminated, and stands on Position #1, as shown in Figure 470–7–1 or Figure 470–7–2. Cutter closes door and begins doffing procedures.

WARNING

Contact with doffee's protective garment contaminates cutter's gloves. Cutter shall **not** touch doffee's skin or inner clothes, and should rinse his own gloves in 9 percent HTH, without removing them, whenever possible.

b. Cutter releases hook and pile tabs at waist of smock, at wrists, and at bottom of trousers. Cutter instructs doffee to **about face** so that doffee's back is toward cutter. **Cutter instructs doffee to place two fingers on voicemitter to prevent breaking mask seal**. Pulling smock away from doffee, cutter cuts up back of smock to neck area, then completely through either side of hood to face opening. **Cutter shall touch only green outer fabric of smock and not black inner fabric**.

c. Cutter instructs doffee to **about face**. Cutter ensures that smock is not snagged on doffee's mask. Cutter then instructs doffee to place two fingers on mask voicemitter while smock is being removed from head and then, when directed, to to extend arms at a 45° angle with deck in front of and away from body, making a fist to prevent removal of gloves. It is useful if the cutter mimics this sequence for the doffee. Cutter then grasps top of hood with hand on opposite side from where hood was cut and top of doffee's shoulder with other hand. Cutter removes smock from doffee's head, taking care not to snag smock on doffee's mask. Cutter pauses when smock is clear of doffee's head and instructs doffee to extend arms forward as described above. Cutter then pulls smock away from doffee in a smooth motion, turning smock inside out. Cutter pulls smock over gloves, which are not removed, and deposits it in first trash can.

NOTE

When trash can becomes full, cutter lifts plastic bag from can and places it outside CCA when ready for another doffee to enter. Cutter then lines trash can with another plastic bag. Bags can hold about five overgarments or 10 sets of boots and gloves.

WARNING

Cutter shall take care when removing protective coat so as not to remove doffee's protective gloves at the same time.

d. Doffee then moves to Position #2 and stands in front of stool facing cutter (second cutter in a two–cutter CCA).

NOTE

In the two cutter process, the second cutter takes over subsequent steps. The basic procedures are the same as the one cutter process, except that Cutter #1 cuts and removes smock; Cutter #2 cuts and removes the trousers and boots and outer gloves.

e. Cutter pulls one CPO trouser leg away from boot and cuts up front all the way through to the top, **outside of suspender loops**, taking care to keep scissors away from inner clothing. Cutter repeats this procedure on other trouser leg.

f. Cutter pulls top of trousers away from doffee's body so suspenders can be cut without touching doffee's shirt. Cutter places scissors in 9 percent calcium hypochlorite solution while continuing to hold front of CPO trousers away from doffee's body with one hand. Then, with other hand, cutter grasps CPO trousers in crotch area and removes them by pulling them down and away. Cutter places trousers in first trash can.

g. Cutter directs doffee to sit on bench or stool and to take care not to touch it with his gloves. Cutter cuts laces on both boots. Doffee raises foot closest to raised grating at Position #3. Cutter grasps heel of overboot and pulls overboot off, taking care to avoid touching doffee's work shoes. Overboot may be cut off if necessary.

Doffee places this foot into Position #3. Doffee remains seated. Procedure is repeated with other foot. Cutter places boots in second trash can.

h. Cutter instructs doffee to loosen but not remove rubber gloves. Cutter pulls off doffee's gloves and drops them in second trash can, leaving cotton liners on. It is not a problem if cotton liner is inadvertently removed during this process, in which case it would be placed in trash can with glove.

i. Cutter decons his gloves.

j. Cutter opens inboard door, doffee exits CCA and cutter closes door behind him. At this point, doffee is wearing only his regular clothing and shoes, glove liners (possibly) and mask.

WARNING

The mask is NOT to be removed until the all clear is passed, as specified in the ship's CBR Bill, meaning that no agent vapor is present in the ship.

k. Corpsman or an individual who has received training from medical department examines doffee for signs of agent exposure (pinpoint pupils, feelings of nausea, difficulty breathing, etc.) or heat stress and recommends action. Healthy personnel are sent to decon station. Individuals exhibiting symptoms of exposure to chemical agents or heat stress are treated and sent to casualty collection stations.

NOTE

If the CCA is collocated with the decon station, as described in paragraph 470–7.2.1.3, the medical examination takes place at the exit from the decon station.

l. When cutter is ready for next doffee, he opens outer door, doffee enters bootwash and process is repeated.

470–7.5.3.6 Proceeding Through the Contamination Control Area for Removal of the ACPG. After completing gross decontamination, individuals proceed through the CCA when directed.

NOTE

CCA door may be kept open for short periods of time to allow accumulated agent vapors to dissipate from CCA to weather.

a. When door to CCA is open and cutter signals ready, doffee steps into bootwash and gently scrubs his boots with brush for approximately 10 seconds. Doffee then enters CCA without touching door with his gloves, which have already been decontaminated, and stands on Position #1, as shown in Figure 470–7–1 or Figure 470–7–2. Cutter closes door and begins doffing procedures.

WARNING

Contact with doffee's protective garment contaminates cutter's gloves. Cutter shall **not** touch doffee's skin or inner clothes, and should rinse his own gloves in 9 percent HTH, without removing them, whenever possible.

b. While doffee is facing cutter, cutter releases hook and pile fasteners on legs and sleeves of protective overgarment. He also unsnaps coat retention cord from webbing strip on bottom front of protective coat.

c. Cutter instructs doffee to place two fingers on voicemitter on his protective mask. This prevents seal of doffee's protective mask from being broken while cutter loosens barrel lock on hood of doffee's protective overgarment. Cutter releases tension on cord of barrel lock assembly. Cutter then releases hook and pile fastener on front of protective coat and opens slide fastener.

NOTE

When trash can becomes full, cutter lifts plastic bag from can and places it outside CCA when ready for another doffee to enter. Cutter then lines trash can with another plastic bag. Bags can hold about five overgarments or 10 sets of boots and gloves.

WARNING

Cutter shall take care when removing ACPG coat so as not to remove doffee's protective gloves at the same time.

d. Cutter instructs doffee to **about face**. Cutter ensures that smock is not snagged on doffee's mask. Cutter instructs doffee to place two fingers on mask voicemitter while hood of ACPG coat is being removed. Cutter then removes hood from doffee's head. Cutter tells doffee to place his arms by his sides and toward his back with his fists clinched. It is useful if the cutter mimics this sequence for the doffee. When doffee has his arms in proper position, cutter grasps shoulder's of doffee's ACPG coat and starts removing coat from doffee by pulling down and away from doffee's body. After ACPG coat is removed, it is placed in a plastic bag in first trash can in CCA.

e. Doffee moves to Position #2 and stands in front of stool facing cutter (second cutter in a two–cutter CCA).

NOTE

In the two cutter process, the second cutter takes over subsequent steps. The basic procedures are the same as the one cutter process, except that Cutter #1 cuts and removes smock; Cutter #2 cuts and removes the trousers, boots and outer gloves.

f. Cutter rinses his hands in 9 percent HTH solution and instructs doffee to **about face**. Cutter then opens slide fastener and snaps at fly. Cutter again rinses his gloves in 9 percent HTH solution. Cutter pulls top of trousers away from doffee's body so suspenders can be released without touching doffee's shirt. While holding front of ACPG trousers away from doffee's body with one hand, cutter, with other hand, releases suspender clips. Cutter then grasps trousers at hips and pulls them down to just above doffee's knees. Holding trousers firmly,

cutter instructs doffee to sit down carefully on bench or stool. **Doffee may steady himself by touching bulkhead but shall not touch stool with his gloves. Cutter ensures that doffee's trousers do not touch stool**. Cutter instructs doffee to lift one leg, bend knee and point toe downward. Cutter removes trouser leg over protective boot, which remains on doffee's foot. Procedure is then repeated for other leg. Cutter places trousers in first trash can.

g. Doffee remains seated on stool while cutter uses scissors to cut laces on protective overboot. Doffee then lifts his foot closest to raised grating at Position #3. Cutter grasps heel of overboot and pulls overboot off, taking care to avoid touching doffee's work shoes. Overboot may be cut off if necessary. Doffee places this foot onto Position #3. Doffee remains seated. Procedure is repeated with other foot. Cutter places boots in second trash can.

h. Cutter instructs doffee to loosen but not remove rubber gloves. Cutter pulls off doffee's gloves and drops them in second trash can, leaving cotton liners on. It is not a problem if cotton liner is inadvertently removed during this process, in which case it would be placed in trash can with glove.

i. Cutter decons his gloves.

j. Cutter opens inboard door, doffee exits CCA and cutter closes door behind him. At this point, doffee is wearing only his regular clothing and shoes, glove liners (possibly) and mask.

WARNING

The mask is NOT to be removed until the all clear is passed, as specified in the ship's CBR Bill, meaning that no agent vapor is present in the ship.

k. Corpsman or an individual who has received training from medical department examines doffee for signs of agent exposure (pinpoint pupils, feelings of nausea, difficulty breathing, etc.) or heat stress and recommends action. Healthy personnel are sent to decon station. Individuals exhibiting symptoms of exposure to chemical agents or heat stress are treated and sent to casualty collection stations.

NOTE

If the CCA is collocated with the decon station, as described in paragraph 470–7.2.1.3, the medical examination takes place at the exit from the decon station.

l. When cutter is ready for next doffee, he opens outer door, doffee enters bootwash and process is repeated.

470–7.5.3.7 Proceeding Through the Decon Station. Doffees proceed from the CCA to the decon station by the designated route.

WARNING

The mask canister shall not be exposed to direct water spray or the filter will clog. The doffee shall shield the canister to keep water spray out. The doffee shall not touch the mask with unprotected hands.

a. When doffee arrives at decon station, he removes work shoes and all inner clothing except mask and pullover shirts and places it in a plastic bag. He cuts off all pullover shirts (tee shirts, flight deck jerseys, etc.) down front from top to bottom so he can remove them without disturbing mask seal. The doffee removes the cotton gloves last. He enters station and showers with sea water. Shower can last until next person arrives.

b. Personnel manning decon station shall ensure orderly traffic flow and that clothing is sealed in plastic bags to be checked later with an M256A1 detector kit. Monitor also looks for delayed signs of personnel exposure to agent.

NOTE

Complete monitoring of individuals for contamination is not feasible or reliable with current detectors. Strict adherence to proper procedures and screening for symptoms of exposure are the best precautions.

c. Upon completion of shower, personnel don clean clothing and proceed to assigned areas to await assignments. Ensure clean clothing is staged at decon station exit.

NOTE

The purpose of the clothing at the decon station is simply to allow individuals to return to their lockers to obtain their own. Organizational clothing such as coveralls is adequate. Disposable clothing may be used if available.

470–7.5.3.8 Post-Attack Procedures. When monitoring teams can no longer detect agent vapor throughout the ship, unmasking procedures are executed in accordance with paragraph 470–4.4.6. When the all clear is given, all personnel doff masks. Personnel who may have been exposed to liquid agent (those who were processed through personnel decon) shall remove the mask by placing a plastic bag over the head and then removing the bag and mask together. These individuals must not touch their masks with their bare hands. Masks are returned to designated collection points in accordance with the ship's CBR bill for final decon and reissue. A designated decon team, in full chemical protective ensemble, shall decon the CCA using the following procedures:

a. Dump bootwash calcium hypochlorite solution on deck surrounding bootwash.

b. Remove scissors from scissors wash, seal in a plastic bag, and return to designated collection point for final decon and reissue. Dump scissors wash calcium hypochlorite solution on CCA deck.

c. Mix sufficient fresh 9 percent calcium hypochlorite solution in sea water to decon the entire CCA (see paragraph 470–7.2.3.1.1 for mixing instructions).

d. Scrub down area with the new solution and rinse with sea water. If CCA does not have a drain, minimize rinse water and push contamination toward center of contaminated area. Mop up contaminated water with cloth or paper and dispose of residue in containers.

e. Scrub down area with detergent solution (at ratio of 1 ounce detergent to each gallon of sea water). Rinse thoroughly with sea water.

f. Check for residual contamination using M8/M9 paper for liquid and M256A1 for vapor. If contamination is found repeat step e. If problem persists, decon team members shall wash their boots and gloves with detergent solution and rinse them thoroughly, then check again for residual contamination.

NOTE

The M256A1 detector may give false positive readings in the presence of a calcium hypochlorite solution.

g. When decontamination of CCA is complete, a relief cutter wearing a chemical protective ensemble that has not been exposed to liquid agent shall remove outer garments of decon team members in CCA. Last doffee from decon team shall assist cutter to remove his outer garments. Plastic bags of protective clothing are placed outside CCA for decon or disposal.

470–7.5.4 PERSONNEL DECONTAMINATION PROCEDURES ON CPS SHIPS. Decontamination procedures for processing personnel into CPS spaces are very similar to those for conventional decon stations. The major difference is the use of an air sweep in either a Type I air lock or the Contamination Purge Lock (CPL) in a CPS decon station as described in paragraph 470–6.3.3 and its subordinate paragraphs. This allows removal of the mask without risk to the doffee. There is a continuous sweep of clean air from the Toxic free area (TFA) through the decon station or Type I air lock.

470–7.5.4.1 Basic Functions of Personnel Decontamination in a CPS Decon Station. The layout of a CPS decon station is described in paragraph 470–7.2.1.3. This paragraph describes where the basic functions discussed in paragraph 470–7.1.5 are performed in a CPS decon station. Stage 1, gross decontamination, takes place outside the ship because of the danger of spreading liquid contamination into the ship. Stage 2, removal of contaminated outer clothing, is completed in the Outer Clothing Undressing Area (OCUA), which is equivalent to the CCA. Stage 3 takes place in the Inner Clothing Undressing Area (ICUA). Stage 4 is performed in the shower. The CPS decon process has an additional step after the shower. A final air sweep for any remaining vapor is performed in the Contamination Purge Lock (CPL), where the mask is removed. Stage 5, medical review, is at the exit from the station.

470–7.5.4.2 CPS Decon Station Manning. The decon station team will consist of four or five members with the following responsibilities:

a. Team leader posted outside the entrance, to direct personnel in removal of battle dress equipment, use of the M291kit to decon mask and gloves, and boot decon. Team leader also ensures that personnel enter the decon station in an organized manner.

b. One or two cutters (depending on OCUA size) posted in the OCUA to doff protective clothing from exposed personnel and instruct them in the proper procedures during processing. Relief cutter(s) shall be readily available.

c. Station assistant posted in the passageway adjacent to the CPL to operate the shower area controls.

d. Medically trained person to monitor personnel for symptoms of agent exposure and heat stress and to take appropriate action.

A second decon team of four or five relief personnel shall be standing by ready to don protective clothing and relieve the first decon team. This is dependent on the number of personnel expected to be processed through the CCA.

470–7.5.4.3 Preparation of CPS Decon Station.

a. Prepare calcium hypochlorite solutions in accordance with paragraph 470–7.2.3.1.1 as described in paragraph 470–7.5.3.3. Set up equipment and calcium hypochlorite solutions as described in paragraphs 470–7.5.3.2 and 470–7.5.3.3 in locations that correspond to designated locations in a conventional decon station and CCA. The bootwash goes outside entrance to OCUA. The OCUA corresponds to the CCA. The ICUA and shower correspond to the conventional decon station.

b. Check drain system to ensure drain traps are full of water and free running, specifically the shower drain (30 second test). **Lack of proper maintenance may result in dirt clogging decontamination station drains.** Check station lighting and emergency lamps.

c. Place trash cans for battle dress items outside entrance to OCUA. Place plastic bags for masks in the purge lock. Place large plastic bags for doffed protective clothing in OCUA and 10 pairs of scissors for the cutters' use.

d. Ensure ventilation air sweep is flowing. Decon station assistant shall check shower and purge lock timers.

e. All doors in the decon station shall be secured prior to opening the decon station entrance door.

470–7.5.4.4 Processing Personnel Through CPS Decon Station.

a. Proceed with the steps for gross decontamination in paragraph 470–7.5.3.4 outside the OCUA.

WARNING

The notes in paragraphs 470–7.5.3.5 and 470–7.5.3.6 concerning opening the CCA door for short periods to allow accumulated agent vapors to dissipate **do not apply** to a CPS decontamination station.

b. Proceed with the steps for removal of overgarment, substituting Outer Clothing Undressing Area (OCUA) for CCA, in paragraph 470–7.5.3.5 (CPO) or paragraph 470–7.5.3.6 (ACPG) as appropriate. Omit step k in these two paragraphs. It is performed later in the process in a CPS decon station.

WARNING

Cutter shall ensure OCUA door to weather is secured before opening door to ICUA to allow doffee enter.

c. Doffee enters Inner Clothing Undressing Area (ICUA). Cutter closes door to OCUA. Doffee removes work shoes and all inner clothing except mask and pullover shirts. Doffee cuts all pullover shirts (tee shirts, flight deck jerseys, etc.) down the front from the top to the bottom so he can remove them without disturbing mask seal. The cotton gloves are removed last. Clothing is placed in plastic bag.

d. Doffee enters shower when directed, removes mask bag that has been left from previous doffee and places this bag in ICUA. Doffee ensures that door to ICUA is secured and shields mask canister with hands. Shower is activated by station assistant.

e. Upon shower completion, station assistant indicates when the Contamination Purge Lock (CPL) is empty. Doffee enters CPL, picks up mask bag left by previous doffee and places it in shower compartment. Doffee secures door between shower and CPL.

f. At end of the two minute purge cycle, doffee picks up a plastic bag. He places bag over his head, grasps mask by canister through the bag, and pulls off mask, letting it fall into bag. He secures bag with a tie provided, and leaves it in CPL. Doffee exits CPL and closes door.

g. A medically trained person monitors doffees in passageway outside CPL in accordance with step k in either paragraph 470–7.5.3.5 or 470–7.5.3.6, as appropriate. He looks for delayed signs of personnel exposure to agent, heat stress, or other injury.

WARNING

In the absence of a reliable way to monitor contamination on personnel or their clothing, strict adherence to proper procedures and screening for symptoms of exposure are the best precautions.

h. Upon completion of shower, personnel don clean clothing and proceed to assigned areas to await assignments. Ensure clean clothing is staged at decon station exit.

NOTE

The purpose of the clothing at the decon station is simply to allow individuals to return to their lockers to obtain their own. Organizational clothing such as coveralls is adequate. Disposable clothing may be used if available.

NOTE

When too many masks accumulate in the ICUA, they can be transferred to the OCUA.

470–7.5.4.5 Post-Attack Procedures for the CPS Decon Station. When the decon station is ordered to secure, a designated decon team of two or three people, in MOPP level 4 gear, shall decontaminate the decon station using the following procedures.

a. Place remaining bags of contaminated garments and masks on the weather deck outside the station entrance.

b. Dump scissors wash calcium hypochlorite solution on deck of OCUA.

c. Mix enough fresh 9 percent calcium hypochlorite solution with detergent and sea water to decontaminate entire station.

d. Starting in the CPL and moving to OCUA, scrub down bulkheads, doors, handles, fixtures and decks with the calcium hypochlorite solution. Rinse with sea water.

e. Prepare sufficient detergent solution (at the ratio of one ounce of detergent to each gallon of sea water). Scrub down the area with detergent solution. Rinse thoroughly with sea water. Secure the door to each compartment as decontamination is completed.

f. Check for residual contamination using the M256A1 kit. If contamination is found, repeat the decon procedure.

NOTE

The M256A1 sampler-detector may give false positive readings in the presence of strong calcium hypochlorite vapors.

g. When the decontamination of decon station is complete, a relief cutter wearing a chemical protective ensemble that has not been exposed to liquid agent shall remove the outer garments of decon team members in OCUA. Last doffee from decon team shall assist cutter to remove his outer garments. Plastic bags of protective clothing are placed outside CCA for decon or disposal.

h. Personnel shall process through the CPL one at a time before removing masks into plastic bags, then enter TFA.

470–7.5.4.6 Use of an Air Lock for Purging. In a CBR environment, personnel within an enclosed area of the ship, but outside a TP zone may enter a TP zone through a Type II airlock if they have not been contaminated by liquid or solid agents. Under these circumstances, the airlock effectively performs the same function as the contamination purge lock of a CPS decon station. **The protective mask shall not be doffed until the purge is complete.**

470–7.5.4.7 Back-Up Personnel Decontamination Arrangements After Loss of CPS Decon Station. Access to a TP zone from the weather through the zone's decontamination station may become impossible due to battle damage. If this occurs, the preferred alternative is to enter an adjacent TP zone through its CPS decon station and proceed to the other zone through a Type III air lock. If there is no adjacent TP zone with an accessible CPS decon station, topside personnel may enter the ship through a conventional decon station and its associated gross decon area and CPA, then enter the TP zone through a Type II air lock. If all the decontamination stations of either type are inaccessible, an emergency decon arrangement shall be provided. Preferably, a CCA would be established in an unpressurized compartment with a weather access and a gross decon area outside. A Type II air lock or a Type III air lock with the air sweep activated would then provide access to the TP zone. As a last resort, a CCA can be established outside a Type I air lock, preferably under an overhang, with a gross decon area nearby. The decontamination procedures outlined for non–CPS ships in paragraph 470–7.5.3 and its subordinate paragraphs provide guidance for this modified decontamination process. In any case, each individual shall complete gross decontamination and cutters shall remove the person's outer clothing before entering any kind of airlock. If necessary, inner clothing may be removed in the airlock. The protective mask can be removed after a complete purge cycle in the air lock. The doffee shall then follow a designated route to the nearest shower. Methods of implementing this procedure vary depending on the ship configuration and the circumstances of the CBR threat. Planning and ingenuity will be required to develop the optimum backup decontamination procedure.

470–7.5.5 PERSONNEL DECONTAMINATION – BIOLOGICAL. Personnel decontamination procedures for biological agent contamination are the same as for chemical agent contamination with a few exceptions.

a. If there is only a biological threat and not a chemical threat, outer clothing may be some sort of utility clothing instead of a CPE.

b. Disinfectant soap is used in the shower.

470–7.6 CHEMICAL DECONTAMINATION OF UTILITY CLOTHING AND INDIVIDUAL PROTECTIVE EQUIPMENT

470–7.6.1 GENERAL COMMENTS ON DECONTAMINATION OF UTILITY CLOTHING AND PERSONNEL PROTECTIVE EQUIPMENT. Some of the equipment that is removed during the personnel decontamination process for chemical agents can be decontaminated and reissued. Areas shall be designated for the storage and decontamination of contaminated equipment. These areas should be well ventilated and as far aft as possible.

470–7.6.2 WET WEATHER CLOTHING. The procedure for decontaminating wet weather (rubberized) clothing is to wipe off all visible agent, using a cloth moistened with nine percent calcium hypochlorite, prior to removal. After removal, the garments are then dipped in nine percent hypochlorite, rolled up while wet, allowed to stand for ten minutes, rinsed in fresh water, and dried. The initial need for decontamination and the effectiveness of any decontamination can be determined by the following procedure. Place one or more garments in a tightly covered metal container in a warm location for four hours, then use an M256A1 detector kit to test the air in the container.

470–7.6.3 PROTECTIVE MASK. If the mask has been exposed to blood agents, the canisters shall be discarded in accordance with the guidance in paragraph 470–5.2.6.2. If the mask has been exposed to persistent chemical or biological agents, the exposed surfaces of the canister shall be thoroughly cleaned of all agent residue with a damp cloth which has been dipped in a nine percent solution of warm calcium hypochlorite. The canister shall be removed from the mask and a contaminant-free protective cover shall be placed over the canister's outlet port (including the threads on the canister) and the canister should be placed outlet side up to dry. The outlet side of the canister is the side that attaches directly to the mask. For the rest of the mask, two alternative decon procedures are available, described in the following paragraphs. Insert fresh canisters once the mask has been decontaminated and is to be used again. Use decontaminated canisters once the stock of fresh canisters has been depleted. Wearers of decontaminated masks and canisters should notify medical personnel if eye irritation or other symptom of chemical agent toxicity (such as tightness of the chest, nausea, etc.) occurs.

470–7.6.3.1 Wet Method. Remove the outsert and dip the outsert and the complete facepiece of the mask, including the head harness, in a warm nine percent calcium hypochlorite solution. Leave them wet or immersed for five minutes, rinse thoroughly in warm fresh water, then rinse in cool fresh water. Dry completely and test for agent residue with M8 and M9 paper. Any cloudy condition of the facepiece should gradually disappear as water evaporates. Test facepieces for CW agent by placing one or more in a tightly closed metal container and leaving in a warm area (100°F to 140°F) for four hours. The storage area shall be marked with warning signs. Standard contamination markers, described in paragraph 470–7.2.3.3, shall be used. After four hours, take the container outside the skin of the ship and sample the air in the container using an M256A1 detector kit. This test shall not be conducted inside the ship.

470–7.6.3.2 Air Dry Method. If an alternate method is required due to a shortage of calcium hypochlorite or lack of time to perform the foregoing procedure, masks can be air dried from two days to one week. Outserts shall be removed. Masks shall be supported so as to minimize stretching or distortion and should not be allowed to come in contact with oil or grease. An unoccupied area with exhaust ventilation shall be used for this method and it shall be marked with warning signs. Standard contamination markers, described in paragraph 470–7.2.3.3, shall be used.

470–7.6.4 CHEMICAL PROTECTIVE GLOVES AND CHEMICAL PROTECTIVE FOOTWEAR COVERS (CPFC's). The chemical protective gloves and Chemical Protective Footwear Covers shall be decontaminated as follows. Wipe off all visible agent from the gloves with the M291 skin decontaminating kit prior to entering the CCA or decon station. Wipe off all visible agent in the bootwash prior to entering the

contamination control area or decontamination station. After removal, discard cut laces. Each pair of CPFC's comes with an extra pair of laces to replace those discarded in the decontamination process. Dip the gloves and CPFC's into nine percent calcium hypochlorite solution, roll up wet, allow to stand for 10 minutes, rinse in fresh water, and dry. The initial need for decontamination and the effectiveness of decontamination can be determined by placing one or more gloves or boots in a tightly covered metal container in a warm location for four hours. Use the M256A1 detector kit to test the air in the container. If the test is positive, repeat the decontamination procedure. If, after the second time CPFC's and gloves are decontaminated, a positive test results, the CPFC's and gloves shall be considered heavily contaminated, sealed in plastic bags and disposed of.

470–7.6.5 SELF AID AND BUDDY AID ITEMS. Atropine injectors, pralidoxime chloride auto injectors (2–PAM chloride) injectors and Nerve Agent Pre-treatment Pyridostigmine (NAPP) shall be washed with soap and water to remove any of the black powder from the M291 kit that remains from gross decon. These items shall be washed before reissue regardless of whether any powder is seen or not.

470–7.6.6 UTILITY CLOTHING. Utility clothing and work uniforms that were protected by CPE or other outer garments can be laundered with bleach and reused.

470–7.7 CHEMICAL DECONTAMINATION OF PERSONNEL WEARING AIRCREW OR ARMY PROTECTIVE CLOTHING AND EQUIPMENT

470–7.7.1 GENERAL. It may be necessary to process contaminated aircrew, beach master, Construction Battalion (CB), Army or Marine Corps personnel through the decontamination process when they arrive on a ship from a beach head or battle zone. Some modifications to the shipboard personnel decontamination process may be necessary to accommodate the differences between shipboard protective clothing and equipment and the corresponding items used by these other organizations. Shipboard decon station personnel need to be aware of the differences.

470–7.7.2 CHEMICAL PROTECTIVE CLOTHING AND EQUIPMENT USED BY NAVY AND MARINE CORPS AIRCREW PERSONNEL. The features that differentiate the protective equipment used by Navy and Marine Corps helo crews include the following.

a. The MCK–3/P protective mask is designed to be compatible with the standard aircrew helmet.

b. Blown, filtered air is provided to the mask by a battery powered tactical ventilator on a shoulder strap. The ventilator contains a filter and fan.

c. The MK–1 chemical protective undercoverall is a one–piece, impregnated garment with a charcoal layer. It is worn under the flight suit. It is not decontaminable.

d. A disposable plastic cape may be worn over the flight suit for protection from liquid agent.

e. Chemical protective socks are worn under the standard aircrew flight boot. Disposable plastic overboots may be worn over them.

f. The chemical protective gloves worn by aircrew personnel are similar to the shipboard item.

470–7.7.3 MODIFICATIONS TO THE SHIPBOARD PROCEDURES FOR DECONTAMINATION OF PERSONNEL, CLOTHING AND PORTABLE EQUIPMENT WHEN PROCESSING NAVY HELICOPTER AIRCREW PERSONNEL. Procedures for decontamination of navy helicopter aircrew personnel are provided in the **Naval Aviation Nuclear, Biological and Chemical (NBC) Defense Resource Manual** (NAVAIR A1–NBCDR–OPM–000). There are some inconsistencies between the procedures in the NAVAIR manual and the procedures in Section 7 of this manual. They shall be resolved by damage control and air wing or air det personnel before the ship enters a CBR warfare threat area.

a. The buddy procedures in the aircrew decon process are roughly analogous to the gross decon procedures in paragraph 470–7.5.3.4 but the aviation life support equipment (ASLE) and individual protective CBR

equipment that are removed in this stage are different. A separate plastic bag for the equipment of each aircrewman is required. The decon team leader directs this process and shall be prepared to assist any aircrewman that is not matched with a buddy.

b. It may be necessary to provide MCU–2/P series masks to aircrew personnel during gross decon. The tactical ventilator that provides blown, filtered air to the MCK–3/P mask is battery powered. The directions in the NAVAIR manual specify that each individual remove the mask and set the mask and ventilator aside prior to entering the CCA or OCUA. Quick–don gloves are used in this process to prevent the spread of contamination.

c. To facilitate removal of the undercoverall, scissors are used to make a cut from the waist up the back and through the collar.

d. Boot laces are not cut in the aircrew doffing procedure.

e. Shelves or hooks are called for in CCA's for temporary stowage of aircrew field masks.

470–7.7.4 ARMY CHEMICAL PROTECTIVE CLOTHING AND EQUIPMENT. The Army publication that describes Army protective clothing and equipment is FM 3–4, **NBC PROTECTION**. These items may be worn by Marine Corps, Navy beach master and construction personnel as well. The following items differ from the shipboard counterparts as indicated.

a. The battledress overgarment (BDO) is a two piece ensemble with slide fastener closures used by ground forces. It is not decontaminable. The newer Saratoga suit is similar.

b. The Army M–40 series masks are worn by ground forces with a hood that extends downward over the shoulders. The hood is not part of the overgarment.

c. Green or black vinyl overshoes (GVO/BVO) are used with the BDO or Saratoga suit with combat boots for chemical protection. They are decontaminable.

d. The Army and Marine Corps have a Contamination Avoidance and Liquid Protection Suit (SCALP) that may be worn over the BDO for up to one hour for protection from gross liquid decontamination. The SCALP is a lightweight, disposable suit consisting of a jacket, trousers and footwear covers.

e. Army aircrew members may wear the aircrew uniform integrated battlefield (AUIB), a two–piece uniform with hook–and–pile closures. In addition to providing CBR protection, it also provides flame protection, so it replaces both the standard flight suit.

f. The chemical protective gloves used by these personnel are similar to the shipboard item.

WARNING

Hasty decontamination procedures for contaminated ground force personnel are not adequate to allow them to enter the ship.

470–7.7.5 SHIPBOARD DECONTAMINATION OF GROUND FORCE PERSONNEL. In general, the best approach to decontaminating contaminated ground force personnel is to provide them support and a suitable location to execute their standard change out procedures. Personnel from these units shall be assigned to process decontaminable items with shipboard facilities.

SECTION 8.
TECHNICAL SUPPORT OF OPERATIONS IN A TOXIC ENVIRONMENT

470–8.1 BALANCING MISSION REQUIREMENTS AND PROTECTIVE POSTURE

470–8.1.1 RISK MANAGEMENT. Chemical-biological warfare defense is not a function that a ship performs in isolation from other tasks. Ships are expected to operate in hazardous environments. A chemical or biological environment should be viewed as a potential overlay on any warfare task. It may impair the ability of a ship to perform its assigned mission. Commanding Officers face the difficult task of choosing a defensive posture that is appropriate to both the level of the threat and the requirements of the mission. In some situations, the risk of chemical or biological casualties must be accepted to permit accomplishment of a high priority mission, but this risk should always be minimized. Risk management is basically making informed tradeoffs. It is important to understand, not only the capabilities of chemical and biological weapons, but their limitations as well. This knowledge will provide the ability to make informed decisions about the level of protection required. Protective measures can then be limited to those that are necessary and their use can be suspended as soon as possible. In this way, the negative impact on operational capability can be minimized.

470–8.1.2 MISSION ORIENTED PROTECTIVE POSTURE (MOPP). MOPP is the management tool that is used to coordinate the use of the systems, equipment and procedures described in this chapter of Naval Ships' Technical Manual. It provides for incremental levels of individual and collective countermeasures against CBR attacks. Full protective clothing and equipment will not be necessary in all chemical and biological threat scenarios. Also, full individual protection may result in unacceptable personnel performance degradation. MOPP procedures are a means of establishing levels of chemical and biological protection consistent with the threat environment, mission requirements and acceptable risks. Naval Warfare Publication (NWP) 3–20.31 is the authoritative source of information on the definition of MOPP levels and their use in shipboard CBR Defense. Key chemical-biological defense actions and equipment defined for each MOPP level in NWP 3–20.31D, are summarized here for convenience. Refer to the NWP for more complete guidance.

a. MOPP-1

1. Individual protective equipment (including new, unopened mask canisters and, if assigned, Audio Projection Sets) and medical supply items are issued to shipboard personnel and maintained at respective battle stations; protective masks are fitted for immediate use.

NOTE

Actions for biological threats are the same as for chemical, except for the medical items.

2. Inventory stowed chemical/biological defense equipment and supplies.

3. Set readiness Condition III and material condition Yoke, if not already set.

b. MOPP-2

1. For both chemical and biological threats, protective mask is in carrier and worn on person.

2. Pre-position decontamination supplies in decon stations and at repair lockers; and pre-position stowed detection and monitoring equipment, supplies and empty canteens as specified in the ship's CBR Defense Bill.

3. Set material condition ZEBRA (modified).

c. MOPP–3

1. Install new filter canisters on protective masks, maintain in carrier and on person; provide wet weather gear for donning over other protective clothing and equipment for weather deck activities; don

overgarment trousers and coat with hood down; don chemical protective overboots; stow personnel decontamination kit in mask carrier, stow chemical protective glove set and medical supply items in pocket on overgarment coat; initiate pyridostigmine pretreatment regimen.

NOTE

Actions for chemical and biological threats are the same, except that pyridostigmine is for chemical only.

2. Go to general quarters (readiness Condition I may be relaxed and readiness Condition II set at CO's discretion); set material condition ZEBRA.

3. Fill pre-positioned canteens with potable water.

4. Activate decontamination stations and Contamination Control Areas (CCA's) and assure operability; post detection and monitoring teams.

5. Post and monitor detection equipment and materials as designated by the ship's CBR Defense Bill.

6. Activate countermeasures washdown system intermittently.

d. MOPP–4

1. Don protective mask and secure hood over head and around mask; don chemical protective glove set.

2. Direct ship to general quarters (if not previously in effect).

3. Initiate continuous monitoring and operation of detection equipment.

4. Set Circle William.

5. Activate countermeasures washdown system to operate continuously.

470–8.1.3 PRE-ATTACK THREAT ASSESSMENT. One important element in the assessment of the likelihood of a chemical or biological attack is the weather. Some conditions enhance chemical weapon effectiveness, others degrade it. NWP 3–20.31D describes the ways in which weather conditions affect the performance of chemical and biological weapons. If the weather is not favorable for the use of chemical or biological agents, the commanding officer may decide to adopt a protective posture that is less likely to cause heat stress.

470–8.2 CONSIDERATIONS IN CHOOSING A PROTECTIVE POSTURE

470−8.2.1 LOGISTICS CONSIDERATIONS. Prolonged operations in a chemical warfare environment may require the consumption of large quantities of chemical protection material, even before an attack occurs. Decontamination supplies and individual protection clothing and equipment, in particular, are a concern. Shipboard decision makers must take into account the sustainability of any proposed protective posture, including opportunities for resupply from supply ships.

470–8.2.2 MANEUVERING. A ship may need to move to an area where the atmosphere is clean in order to reactivate ventilation to purge the ship and prevent heat stress on personnel and overheating of equipment. In some tactical situations, this need may conflict with other operational requirements.

470–8.2.3 DECONTAMINATION OPTIONS. If the ship is attacked with a persistent agent, the commanding officer must decide how to deal with the contamination. Active decontamination is manpower intensive and time consuming. Since liquid agents can be rapidly sorbed into shipboard paint and deck coatings, decontamination

must be started promptly and executed quickly to be effective. It may not be possible to complete the job in the time available due to the rapid sorption of liquid agent or due to the tactical situation. Therefore, other options than shipwide decontamination must be considered. One alternative is limited operational decontamination with priority given to vital topside stations and routes to those stations. Another is weathering, or passive decontamination. Perhaps topside evolutions can be delayed until the agent desorbs to a safe level. Appendix C provides details on estimating the duration of a hazard environment. Operationally complete decontamination can be achieved by a combination of limited operational decon and weathering. Finally, it may be necessary to fight dirty, to proceed with the mission in protective clothing and to forego decontamination altogether.

470–8.2.4 PERCUTANEOUS VAPOR HAZARD INSIDE THE SHIP. Under certain conditions, a percutaneous (skin) vapor hazard can develop inside a ship in spaces served by conventional ventilation or in a CPS Limited Protection (LP) zone. Modeling indicates that this is more likely to happen when liquid agent has been deposited on the ship's weather surfaces.

APPENDIX A.
GLOSSARY

Activated Charcoal: A form of carbon that has been activated and is characterized by a high capacity to absorb gases, vapors and aerosols; the carbon used in the filters of protective masks and in permeable protective clothing that has been specially treated to absorb chemical agents from the air that passes through.

Absorption: Penetration of solid materials or liquids by a foreign substance (such as a chemical agent) without a chemical reaction.

Adsorption: Adhesion of molecules of a foreign substance (such as a chemical agent) to the surface of solid materials (including crevices) or liquids without a chemical reaction.

Aerosol: A suspension of fine liquid droplets or solid particles in a gaseous medium, the particles being small enough to remain suspended for a significant period of time and behave like a vapor; examples of solid particulate aerosols are dust and smoke; common liquid droplet aerosols are perfumes, oil mists and fog.

Aerosolization: The physical process of breaking up solid or liquid into small particles or droplets and suspending them in air.

Air Change: The process of introducing a volume of air into a compartment that is equal to the volume of the compartment while simultaneously removing an equal volume. Due to mixing, only 65 percent of the air originally in the compartment is removed.

Air Lock: A shipboard passageway in a CPS zone with a quick acting watertight (QAWT) door on either end. Only one door is opened at a time to prevent the flow of air from a pressurized part of the ship to an unpressurized area. Air locks are also equipped with fittings to allow purging of contaminated air.

Bacteria: Single-cell microorganisms, some of which cause disease and could be used in biological warfare. Some bacteria produce toxins that cause disease and can also be used in biological warfare.

Biological Agents: Biological agents can be placed in two classes, pathogens and toxins. Pathogens are microorganisms that can harm humans. Also see **Microorganisms**, **Viruses**, **Bacteria**, **Fungi**, and **Rickettsiae**. Toxins are poisonous substances produced by plants, animals, or microorganisms, but they can also be made in laboratories.

Blister Agents: Chemical agents that injure the eyes and lungs and burn or blister the skin, also called vesicants. They include mustard (H) and Lewisite (L).

Blood Agents: Chemical compounds that affect bodily functions by preventing the normal transfer of oxygen from the blood to body tissues; also called cyanide agents. Blood agents are non-persistent and will remain on a target for only minutes. They include Hydrogen Cyanide (AC) and Cyanogen Chloride (CK).

Calcium Hypochlorite: The standard shipboard decontaminant for chemical and biological agents.

Casualty: A person unavailable for duty because of injuries; also referred to as **Combat Ineffective**.

Chemical Agent: A toxic chemical compound that is intended for use in military operations to cause incapacitation, injury or death in humans.

Chemical Protective Ensemble (CPE): The combination of all individual chemical protective equipment including suit, boots, gloves and mask. Also referred to as “MOPP gear.”

Circle William: The classification of openings between the interior of the ship and the outside atmosphere, including ventilation systems, that are secured to minimize the penetration of chemical or biological agents.

Collective Protection System (CPS): A system of air locks, high pressure fans and high efficiency filters providing pressurized, filtered air to Total Protection (TP) zones and filtered air to Limited Protection (LP) zones. See also **Total Protection Zone** and **Limited Protection Zone**.

Concentration: See **Contamination Concentration**.

Contact Hazard: A skin hazard that exists when exposure to a chemical or biological agent can result from touching a contaminated surface.

Contamination: The deposition on and absorption of biological or chemical agents by shipboard structures, areas, personnel, or equipment; the presence of chemical or biological agents in the air in the form of vapors (chemical) or aerosols (chemical or biological).

Contamination Concentration: Amount of a chemical agent vapor or aerosol present in a unit volume of air; usually expressed in milligrams per cubic meter (mg/m^3).

Contamination Control: Procedures to avoid, reduce, remove, or render harmless, temporarily or permanently, biological or chemical contamination for the purpose of maintaining or enhancing the efficient conduct of military operations.

Contamination Density: Amount of liquid or solid agent in a unit area; usually expressed in milligrams or grams per square meter (mg/m^2 or g/m^2).

Countermeasure Washdown System: A dry-pipe sprinkler system equipped with nozzles designed and arranged topside to throw a large water spray pattern on weather surfaces; water is supplied from the ship's firemain. Originally designed as a countermeasure system for nuclear fallout, it is also effective in the control of chemical and biological contamination.

Decontaminant: Anything used to break down, neutralize, or remove a chemical or biological material posing a threat to personnel or equipment.

Decontamination: The process of making any person, equipment, or structure safe by absorbing, destroying, neutralizing, making harmless, or removing chemical or biological agents.

Density: See **Contamination Density**.

Detector: Any mechanism by which the approach or presence of a chemical or biological agent is made known.

Detector Paper: A specially treated paper used to determine the presence of liquid chemical agent.

Detergent: A soap-like cleaning and emulsifying substance; in a broad sense it includes soaps, but commonly refers only to modern synthetic, non-soap detergents or surfactants which are usable in either fresh water or sea water.

Dose (Chemical or Biological): The amount of biological or chemical agent to which a person is exposed in a given period of time.

Eye-Respiratory Hazard: A hazard that exists when a chemical or biological aerosol or a chemical vapor is present in sufficient concentration to be harmful if it enters the body through the respiratory tract or eyes.

Fungus: A unicellular or multicellular organism that is a member of the plant kingdom. Fungi include molds, mildews, smuts, rusts, mushrooms, toadstools, puffballs and yeasts. Fungi produce few important diseases in humans, but some types produce mycotoxins, which are potential biological agents.

Germs: Disease producing microorganisms (also called pathogens), including bacteria, rickettsiae, viruses, and fungi (See **Biological Agents** and **Microorganisms**). Slang.

Heat Casualty: An individual unable to perform his or her duties as a result of heat exhaustion or heat stroke.

Heat Exhaustion: A physical condition caused by exposure to high temperature combined with physical exertion, and marked by faintness, nausea, and profuse sweating; can be considerably reduced by proper physical conditioning and increased fluid intake.

Heat Stress: Heat stress is a pathological condition in which the body's cooling mechanisms are unable to dissipate the heat load generated. It is disabling and in early, mild stages causes mental confusion and loss of coordination and concentration. Heat stress rapidly progresses through heat exhaustion to heat stroke, which is a very serious medical emergency.

Heat Stroke: A state of collapse or prostration, usually accompanied by high fever, brought on by exposure to heat; has a 50 percent mortality rate but accounts for only a small percentage of heat casualties.

HEPA Filter: A High Efficiency Particulate Air filter. HEPA filters remove solid particles and liquid droplets from an air supply.

Hot Spot: A localized area of a ship where chemical or biological contamination is considerably above the average of the surrounding area.

Hydrolysis: The decomposition of a chemical compound by reaction with water, useful in decontamination of some chemical agents, often accelerated by acid or alkaline solutions or by the presence of hypochlorite.

Inhalation Hazard: See eye-respiratory hazard. Since the standard protective mask provides full-face coverage, the terms, eye-respiratory hazard and inhalation hazard are used synonymously.

Limited Protection (LP) Zone: A zone within a collective protection system that provides protection against liquid and solid CBR agents but not agents in vapor form.

Line Source: A continuously moving munition or device that releases chemical or biological agent along its path.

Mask only: A protective posture that provides personnel relief from wearing the complete Chemical Protective Ensemble.

Microbe: See microorganism.

Micron: A unit of length equal to one millionth of a meter, or one thousandth of a millimeter; denoted by the Greek letter mu (μ).

Microorganisms: Microbes, or minute, living organisms too small to be seen with the unaided eye. On the basis of structural and behavioral characteristics, microorganisms may be grouped, in order of decreasing size, as follows: fungi, protozoa, bacteria, rickettsiae, and viruses. Only a small percentage of microorganisms are capable of producing disease in man, plants, or animals. These are called pathogens. Some pathogens are potential biological warfare agents.

Monitoring: The continued or periodic act of seeking to determine whether chemical or biological contamination is present.

MOPP: The acronym for Mission-Oriented Protective Posture; a flexible system for establishing shipboard readiness levels through the use of various elements of collective and individual protection consistent with the threat, work rates imposed by the mission and by environmental conditions.

Mycotoxin: A naturally occurring toxin produced by certain types of fungi that are potential biological warfare agents. Tricothecenes are an example.

Myosis: Excessive contraction of the pupils of the eyes caused by exposure to minute quantities of nerve agents; the pupil is unable to dilate and remains contracted, and task performance is severely impaired or impossible; often accompanied by pain and a headache.

Nerve Agent: A lethal chemical agent that interferes with the transmission of nerve impulses; it can be absorbed into the body through the eyes, respiratory tract or the skin; affects the nervous and respiratory systems and other vital body functions. G and V series agents are nerve agents.

Non-Persistent Agent: A chemical agent that when released, dissipates or loses its ability to cause casualties after a few minutes.

Pathogen: A microorganism which is capable of producing disease (most microorganisms are non-pathogenic). Some pathogens are potential biological warfare agents.

Percutaneous Hazard: A chemical or biological agent that can harm the skin or enter the body through unbroken skin. Also called a **skin hazard**.

Permeable: Having pores or small openings that allow passage of some liquids or gases. For example, the material from which the Chemical Protective Overgarment (CPO) is made is permeable to water vapor.

Persistency: A characterization of the length of time a chemical or biological agent released into the environment can retain its ability to cause injury or illness.

Point Source: A munition or device that releases chemical or biological agent at a single location.

Pressure Lock: A shipboard passageway in a CPS zone with a quick acting watertight (QAWT) door on either end. Only one door is opened at a time to prevent the flow of air from a pressurized part of the ship to an unpressurized area. Unlike an air lock, a pressure lock does not have air sweep fittings for purging contaminated air. Therefore, it is not used in a contaminated environment.

Pre-Wetting: Activation of the Countermeasure Washdown System prior to the arrival of chemical or biological contamination.

Rickettsiae: Intracellular, parasitic microorganisms that are intermediate in size between bacteria and viruses. The rickettsiae are less prevalent and produce fewer diseases than bacteria and viruses; nevertheless, they cause important diseases such as Q fever, typhus fever, and the spotted fevers. Some are potential biological agents.

Secondary Hazard: A chemical or biological hazard that does not develop during the delivery of the agent on target, but develops later. An example is evaporation of agent from liquid agent deposited previously.

Survey: The direct effort to determine the location and nature of the chemical or biological agent on or in a ship.

Total Protection (TP) Zone: A zone within a collective protection system that provides protection against liquid, solid, and gaseous CBR agents.

Toxicity: The property of a material of being able to cause injury to an organism, with the maximum effect being incapacitation or death.

Toxins: Poisonous products of living organisms that, when inhaled, swallowed or injected into man or animals, will cause illness or death. Botulin is an example. Some are potential biological warfare agents. Some toxins can also be produced synthetically.

Transfer Hazard: See contact hazard.

Trichothecenes: Naturally occurring mycotoxins produced by some fungi. Some are potential biological warfare agents.

Vapor: Gas phase of a substance.

Vaporization: To pass into the gas or vapor state.

Vesicant: A blister agent, such as Mustard (HD).

Viruses: A group of parasitic microorganisms that live in the cells of their selected hosts. Viruses are so small that they will pass filters which stop bacteria and rickettsiae. About 60 percent of all infectious diseases are caused by viruses. Some viruses are potential biological warfare agents.

Volatility: The capability of being vaporized.

Weathering: The process by which a chemical agent is removed from the ship's surface areas by the natural action of the environment, especially evaporation by temperature and wind.

APPENDIX B .

TABLE 470–B–1. TECHNICAL MANUAL LISTING FOR CHEMICAL–BIOLOGICAL DEFENSE EQUIPMENT

Installed Equipment	
Countermeasure Washdown System	Ship Information Book, Piping Volume
Collective Protection System (CPS)	SS200–AF–MMM–010, Technical Manual for Navy Shipboard Collective Protection System (CPS), System Description, Operation and Maintenance
	SS200–AG–MMM–010, Technical Manual for Navy Shipboard Collective Protection System (CPS), Chemical, Biological, and Radiological (CBR) Filter System Operation and Maintenance
	SS200–AH–MMM–010, Technical Manual for Navy Shipboard Collective Protection System (CPS), Alarm System Operation and Maintenance
	SS200–AJ–MMM–010, Technical Manual for Navy Shipboard Collective Protection System (CPS), Pressure Control Valve (PCV) Operation and Maintenance SS200–AL–MMM–A10, Technical Manual for LHA 1 Class Organizational and Intermediate Level Maintenance Navy Selected Area Collective Protection System (SACPS)
MK 21 Mod 1 Chemical Agent Point Detector System (CAPDS)	SW073–AB–MNO–010, Operation and Maintenance Instructions with Illustrated Parts Breakdown for Chemical Agent Point Detector System Mark 21 Mod 1, May 1989
Improved (Chemical Agent) Point Detection System (IPDS)	S9437–A8–MMM–010, Draft Technical Manual for Improved (Chemical Agent) Point Detection System (IPDS), System Description, Operation and Maintenance
AN/KAS–1 Chemical Warfare Directional Detector (CWDD)	SW073–AA–MNO–010, Technical Manual – Description, Operation, and Maintenance Instructions for Chemical Warfare Directional Detector AN/KAS–1, 15 Jan 1989, Revision 1

Portable Detection Equipment	
	Instructions for the operation of these items are provided with the equipment and supplemented with information in Section 4 of **NSTM Chapter 470**. The following Technical Manuals are Army publications that can be ordered in accordance with SECNAVINST 5605.1 (series). In cases of conflicting information or directions, **NSTM Chapter 470** and the Navy Preventive Maintenance System (PMS) take precedence.
M256/M256A1 Chemical Agent Detector Kit	TM 3–6665–307–10, Operator's Manual for Chemical Agent Detector Kit M256 and M256A1, September 1985
M8 Chemical Agent Detector Paper	TM 3–6665–307–10, Operator's Manual for Chemical Agent Detector Kit M256 and M256A1, September 1985
M9 Chemical Agent Detector Paper	TM 3–6665–311–10, Operator's Manual Paper, Chemical Agent Detector: M9, 27 April 1982

TABLE 470–B–1. TECHNICAL MANUAL LISTING FOR CHEMICAL–BIOLOGICAL DEFENSE EQUIPMENT (CONT)

Individual Protection	
MCU–2/P and MCU–2A/P CB Masks	S6740–AB–MMO–010, Technical Manual for Operation and Maintenance Instructions with Illustrated Parts Breakdown, Chemical–Biological Mask, Type MCU–2/P, MCU–2A/P
AN/PNT–2 Audio Projection Set	SE101–B3–OMI–010, Operation and Maintenance Instructions for Audio Projection Sets AN/PNT–2
Chemical Protective Overgarment (CPO)	**NSTM Chapter 470,** takes precedence over instructions issued in package.
Advanced Chemical Protective Garment (ACPG)	Operator's Manual for Joint Service Light Weight Suit Integrated Technology (JSLIST) Chemical Protective Clothing.
Chemical Protective Footwear Covers	**NSTM Chapter 470,** takes precedence over instructions issued in package.
Chemical Protective Gloves	**NSTM Chapter 470,** takes precedence over instructions issued in package.
Decontamination	
M291 Skin Decontamination Kit	SS010–AA–MNO–010, Operator's Manual Decontaminating Kit, Skin: M291
Training	
Hand–Held Chemical Agent Simulant Training Disperser	**NSTM Chapter 470,** Appendix E, and vendor brochure issued with disperser

NOTE

Refer to NAVSUP P-2002 for information on latest publication changes and revisions.

APPENDIX C.
SHIPBOARD CHEMICAL HAZARD ASSESSMENT GUIDE
(C–HAG)

470–C.1 INTRODUCTION. This document provides the most current information available on chemical agent weathering times and hazard duration for various conditions. The hazard durations are generalized estimates based on controlled conditions and actual situations will vary. Use C–HAG as a guideline only.

470–C.2 PURPOSE. The purpose of the C–HAG is to provide information to enhance the decision-making capability of ship commanders in a chemical warfare (CW) environment, for the most probable classical agent types (H, G, and V).

470–C.3 GENERAL

470–C.3.1 Possible decisions that may be made based on C–HAG estimates include:

a. Determining optimum Countermeasure Washdown (CMWD) use and durations.

b. Determining if weathering only will provide satisfactory operational decontamination.

c. Determining if any manpower intensive decontamination might be required.

470–C.3.2 When the estimated weathering times have been reached, detection procedures to establish the absence of contamination can then lead to reduction of Mission-Oriented Protective Posture (MOPP) levels for personnel (exterior and interior) and relaxation of Circle William settings.

470–C.3.3 C–HAG provides information about estimated duration of respiratory and contact hazards of liquid chemical agents under a range of environmental conditions. These estimates are given for three CMWD actions:

a. No pre-wetting or No washdown

b. No pre-wetting or 15 minutes washdown

c. Intermittent pre-wetting or 15 minute washdown

470–C.3.4 Weathering Factors: Physical removal by water spray (CMWD) removes the bulk of agent deposited on the deck. Evaporation of the remainder is assisted by sun (heat increases evaporation) and wind. All three must be taken into account when using C–HAG. Pre-wetting of the deck assists in later agent removal by preventing it from soaking into the surface, and is highly recommended.

CAUTION

C–HAG PROVIDES ONLY ESTIMATES OF HAZARD DURATIONS. ACTUAL SITUATIONS WILL VARY.

470–C.4 PRECAUTIONS

a. **ALWAYS USE EXTREME CAUTION IN DETERMINING REMAINING SHIPBOARD CONTAMINATION**. **TEST FOR REMAINING AGENT; DO NOT DEPEND ON C–HAG ALONE**.

b. Only deck surfaces are included; materials such as canvas, rope, lines, cables, radar, etc. are NOT taken into account. These materials may require decontamination even when decks test “clean.”

c. Areas blocked from sun and wind will have different (longer) weathering times than indicated here. Such areas will require independent detection testing.

d. Areas not covered by CMWD will have different weathering times. Firehosing or spot decontamination may be required.

e. A limited range of temperatures and wind speeds is included. Since actual conditions will vary widely, estimations and interpolation may be necessary.

470–C.5 ASSUMPTIONS. Due to the complexity and wide range of variables involved in a chemical warfare situation, assumptions had to be made when preparing the C–HAG. These include:

a. C–HAG covers only shipboard surfaces coated with Navy non-skid coating or Navy alkyd enamel paint (exterior, deck gray). Other materials have NOT been tested.

b. Weathering rates of alkyd paint and Navy non-skid paint are not significantly different, even though interaction with agents may be different.

c. Initial surface contamination levels tested range from 1 g/m^2 (grams per square meter) to 10 g/m^2. These levels appeared to have no significant difference in weathering rate. For any differences in data, the worst case was taken to give a conservative estimate. Examples of spray patterns for representative surface contamination levels are shown in Figure 470–C–1.

d. C–HAG assumes an attack via stand-off release; i.e., a spray attack, bulk release, or aerial bursting bombs. C–HAG does not take into account internal bursting weapons or direct hit dissemination of agent.

e. Agents are assumed to be thickened to approximately 1000 centistokes at 60°F (about the same viscosity as maple syrup at 60°F). Thickness will decrease somewhat as temperature increases.

f. Based on shipboard testing using chemical agent simulants, a Countermeasure Washdown (CMWD) activation of at least 15 minutes immediately after a chemical attack (no pre-wetting) will remove an average of 90 percent of thickened G and H agent and 60 percent of V agent.

g. Based on tests, thorough pre-wetting of ship decks with a 15 minutes post-attack CMWD activation will allow removal of about 95 percent of G, H, and V from deck surfaces. The pre-wetting prevents absorption of the agent into the surface, helping removal.

470–C.6 AGENT DESCRIPTIONS

470–C.6.1 The primary CW agents for which ships need to consider decontamination are:

H–type blister agents (HD, HN, HL)
G–type nerve agents (GA, GB, GD)
V–type nerve agents (VX)

470–C.6.2 These agents remain in liquid form until they evaporate (or weather). The weathering time (the hazard duration) depends on the temperature, relative wind speed, and CMWD use.

470–C.6.3 Full chemical protective gear is required for all exterior personnel when liquid agents are present, as they are both contact and inhalation hazards.

470–C.6.4 Ships do not need to decontaminate agents that exist only in vapor form, because they dissipate immediately and do not stick to deck surfaces. They present an inhalation hazard only. These “non-persistent” agents include choking, blood, and incapacitating agents.

470–C.7 GENERAL COUNTERMEASURE PROCEDURES

470–C.7.1 Pre-wetting of deck surfaces is highly recommended. This method of preventing CW agents from adhering to the deck is the most effective, and least manpower intensive, means of contamination control.

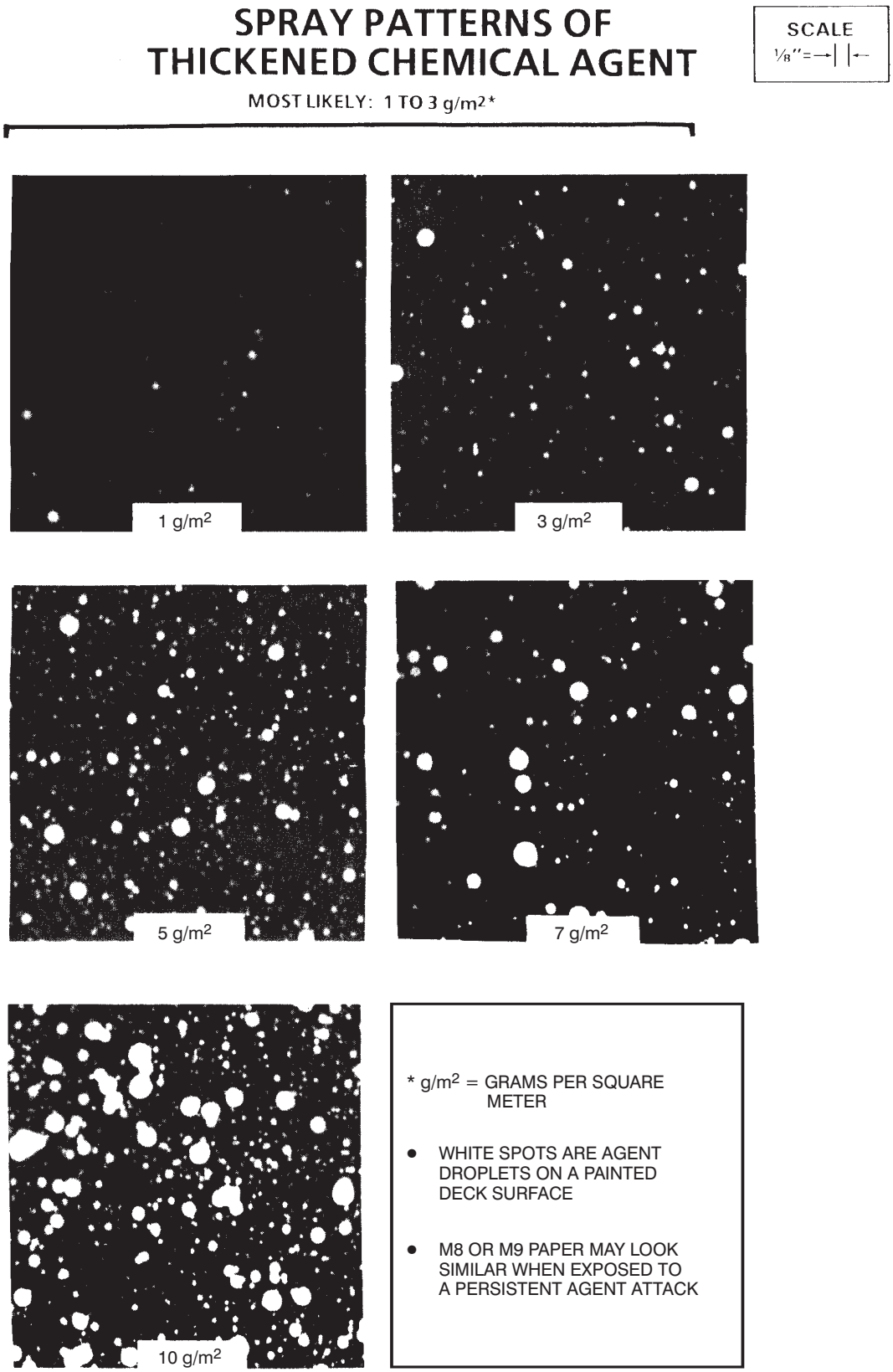

Figure 470–C–1. Estimating Liquid Density of Thickened Chemical Agent

470–C.7.2 For post-attack, operate CMWD for times indicated in “Recommended Actions” sections for individual agents. If CMWD is not used for pre-wetting and post-attack washdown, hazard duration times are much longer.

470–C.7.3 Post-attack maneuvering of the ship in a zig-zag pattern helps distribute wind and CMWD water to more areas of the ship. Due to the type of superstructure found on CVN, LHD, LHA, and LPH, the zig-zag pattern may not be necessary for these types of ships.

470–C.8 GENERAL C–HAG USER INSTRUCTIONS

1. Identify agent (see paragraph 470–C.9).

2. Estimate deck temperature in the local area of concern (see paragraph 470–C.10).

3. Estimate relative wind speed in local area of concern (see paragraph 470–C.11).

4. Turn to appropriate agent section (H, G, or V).

5. Read notes about behavior of agent on deck surfaces and recommended actions (see paragraphs 470–C.14, 470–C.15 or 470–C.16).

6. On agent chart Estimate of Hazard Duration (Table 470–C–1, Table 470–C–2 or Table 470–C–3), select appropriate CMWD situation, deck temperature, and relative wind speed to estimate time required for complete weathering.

7. Turn to appropriate graph (Figure 470–C–2 to Figure 470–C–7) for more detailed information. Note that graphs do not account for CMWD use.

470–C.9 AGENT IDENTIFICATION

NOTE

Falling liquid agents are mostly colorless and may be so small that they are difficult to detect visually. Exterior personnel may feel the sensation of droplets hitting bare skin or may report a strange odor. The sudden appearance of tiny droplets on bridge windows may be a sign of chemical attack, particularly if combined with aerial bursts (or pops) above the ship.

470–C.9.1 Liquid agents are detected with M8 or M9 paper, but only M8 paper provides identification of agent. Paper should be posted whenever the possibility of a CW attack is indicated. Placement locations that remain dry during CMWD system activation should be previously identified by the Damage Control team. Best places to check for contamination are forward-facing bulkheads and open deck surfaces that are not covered by the CMWD. (While M8 paper will work when wet, agent may be washed off by the CMWD.)

M8 Paper results:	
RED	H blister agent
YELLOW or GOLD	G nerve agent
GREEN	V nerve agent

470–C.9.2 Agents in vapor form are detected with the M256A1 detector kit. Vapors may be present from the dissemination, or may result from evaporation of liquid deposited on the deck. Refer to the instruction card in the M256A1 kit for correct agent identification.

470–C.10 DECK TEMPERATURE ESTIMATE

NOTE

A rough estimate of deck temperature is good enough.

1. If the area is in the direct sun, and:

   a. Ambient air temperature is below 60°F:

   USE AMBIENT AIR TEMPERATURE FOR DECK TEMPERATURE

   b. Ambient air temperature is at or above 60°F; and

      (1) wind speed of 0 to 10 knots:

   USE AMBIENT AIR TEMPERATURE PLUS 20°F

      (2) wind speed above 10 knots:

   USE AMBIENT AIR TEMPERATURE PLUS 10°F

2. If the area is not in direct sun (overcast, mostly cloudy, night, dusk, or dawn, or for shaded areas):

   USE AMBIENT AIR TEMPERATURE

470–C.11 WIND SPEED ESTIMATE

NOTE

A rough estimate of relative wind speed is good enough.

1. Obtain the relative wind speed measurement from the navigation/meteorology officer.

2. If necessary, adjust relative wind speed estimate for the local area of concern, i.e., take into account wind blockage by superstructure or equipment.

3. To determine relative wind speed over an extended time period, consider the major wind changes over that time period and estimate an average of those changes. Again, a rough estimate is good enough.

470–C.12 DECONTAMINATION PROCEDURES.

470–C.12.1 If spot decontamination is needed, agents can be effectively decontaminated by scrubbing deck surfaces with a solution of 9 percent calcium hypochlorite (High Test Hypochlorite, HTH), 1 percent detergent, and 90 percent seawater. This is specified in Section 7. Spot decontamination is more effective the sooner it is done.

470–C.12.2 Firehosing is also fairly effective for removing agent from the surface, but will not neutralize the agent (residue will still be toxic).

470–C.13 RESIDUAL HAZARDS. Even though weathering and decontamination procedures may significantly reduce contamination, they cannot guarantee total removal of agents. Appropriate protective postures must be assumed in areas of suspected residual contamination. See Naval Warfare Publication (NWP) 3–20.31 (Rev D) for more information.

470–C.14 H AGENTS (MUSTARD)

470–C.14.1 DESCRIPTION.

a. May be mixed with a thickener to make it as thick as maple syrup at the same temperature.

b. May be mixed with Lewisite, another blister agent, for more immediate effects.

c. H may soak into deck surfaces, but very slowly (hardly visible), and may soften alkyd paint. Because much of the liquid remains on the surface, it should be easily identified with M8 paper.

d. In hot weather (above 80°F), H evaporates fairly rapidly. This off-gassing creates a severe short-term vapor hazard in addition to the contact hazard; full protective gear is required.

e. In cooler weather (50°F to 80°F), H off-gasses more slowly from the deck surface. This creates a longer-term vapor hazard (although the vapor is less concentrated) in addition to the contact hazard. Full protective gear is required.

f. As temperatures drop below 50°F, persistency increases until H agent becomes a solid (solidification point varies with agent mixtures). Vapor hazard of solids is minimal, but contact hazard remains; masks may not be needed but any skin contacting agent must be protected. Solid H remains until temperatures warm above the solidification point, when it will become liquid and off-gas. This is true also for agent transferred to the interior of the ship, where it will create a vapor hazard.

g. H agents tend to be oily and insoluble in water.

470–C.14.2 RECOMMENDED ACTIONS FOR H AGENTS. Pre-wet decks to assist in removal of agent. Select 1 or 2 based on environmental conditions:

1. HOT OR WARM (ABOVE 60°F) WITH SUNNY OR MOSTLY SUNNY SKIES:

a. Activate CMWD system for 15 minutes while proceeding at the maximum speed the mission allows, in a zig-zag pattern (primarily into the wind).

b. Maneuver to provide a relative wind of 5 to 10 knots across the deck for times predicted on Table 470–C–1. Note that solar heating outweighs wind evaporation for agent weathering under these warm, sunny conditions; higher winds may cool the deck and lessen evaporation.

2. ALL OTHER ENVIRONMENTAL CONDITIONS:

a. Activate CMWD system for 15 minutes while proceeding at the maximum speed the mission allows, in a zig-zag pattern (primarily into the wind).

b. Continue to proceed into the wind at maximum speed the mission allows. Note that the effects of wind evaporation outweigh solar heating for agent evaporation under these cooler or cloudier conditions.

470–C.15 G AGENTS.

470–C.15.1 DESCRIPTION.

a. May be mixed with a thickener to make it as thick as maple syrup at the same temperature.

b. G may soak into deck surfaces, but very slowly (hardly visible), and may soften alkyd paint. Because much of the liquid remains on the surface, it should be easily identified with M8 paper.

c. In hot weather (above 80°F), G evaporates fairly rapidly. This off-gassing creates a severe short-term vapor hazard in addition to the contact hazard; full protective gear is required.

d. In cooler weather (50ºF to 80°F), G off-gasses more slowly from the deck surface. This creates a longer-term vapor hazard (although the vapor is less concentrated) in addition to the contact hazard. Full protective gear is required.

e. As temperatures drop below 50°F, persistency increases, and full protective gear is required for a longer time.

Table 470–C–1. H–BLISTER AGENT: ESTIMATE OF HAZARD DURATION (HOURS: MINUTES)

Countermeasure Washdown (CMWD) Situation	Wind Across Deck Area (Knots)	Estimated Deck Temperature		
		30°F	60°F	90°F+
No Pre-Wet No Washdown	0 to 4	72:00 +	24:00 +	6:00
	5 to 20	20:00	4:00	1:00
	21 to 40	12:00	3:45	0:55
	Over 41	10:00	3:30	0:50
No Pre-Wet 15–Minute Washdown	0 to 4	18:00	2:00	1:45
	5 to 20	2:45	1:15	0:30
	21 to 40	2:30	1:15	0:30
	Over 41	2:00	1:00	0:25
Pre–Wet and 15–Minute Washdown	0 to 4	9:00	1:15	0:30
	5 to 20	1:30	1:00	0:20
	21 to 40	1:30	1:00	0:20
	Over 41	1:10	0:55	0:20

Instructions:

1. Select CMWD situation.
2. Align the wind speed with the estimated deck temperature to obtain the hazard duration **estimate**. Interpolation can be used for deck temperature.
3. See the following evaporation (weathering) curves for more information.

NOTE: CMWD system use is always beneficial. In some cases, CMWD system use may not significantly decrease the hazard **time**, but it does significantly decrease the hazard **amount**.

NOTE: This table covers only major exterior deck surfaces (nonskid and alkyd enamel paint). Other materials (canvas, lines, radars, etc.) are **not** taken into account

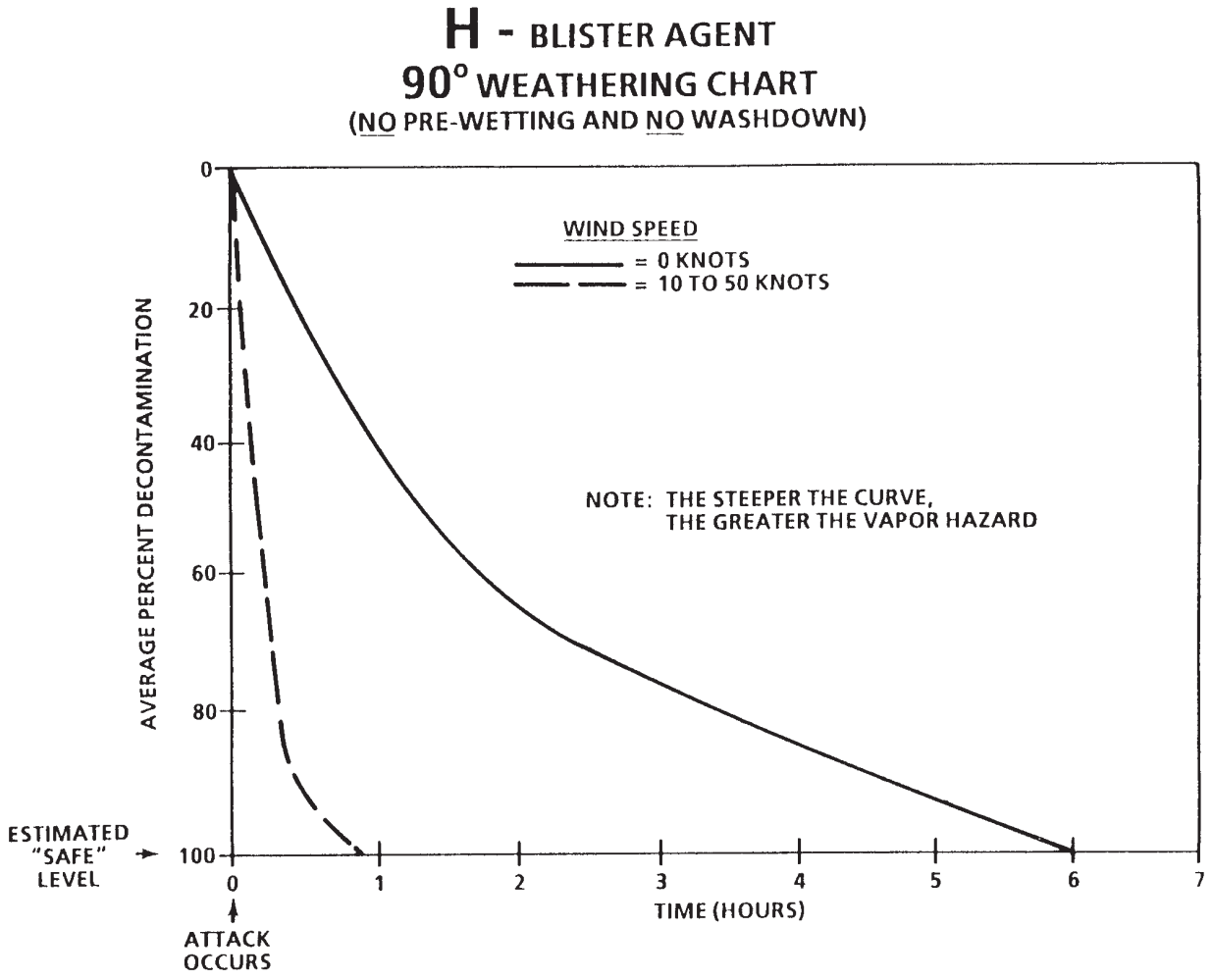

Figure 470–C–2. H Blister Agent Weathering Chart at 90˚F

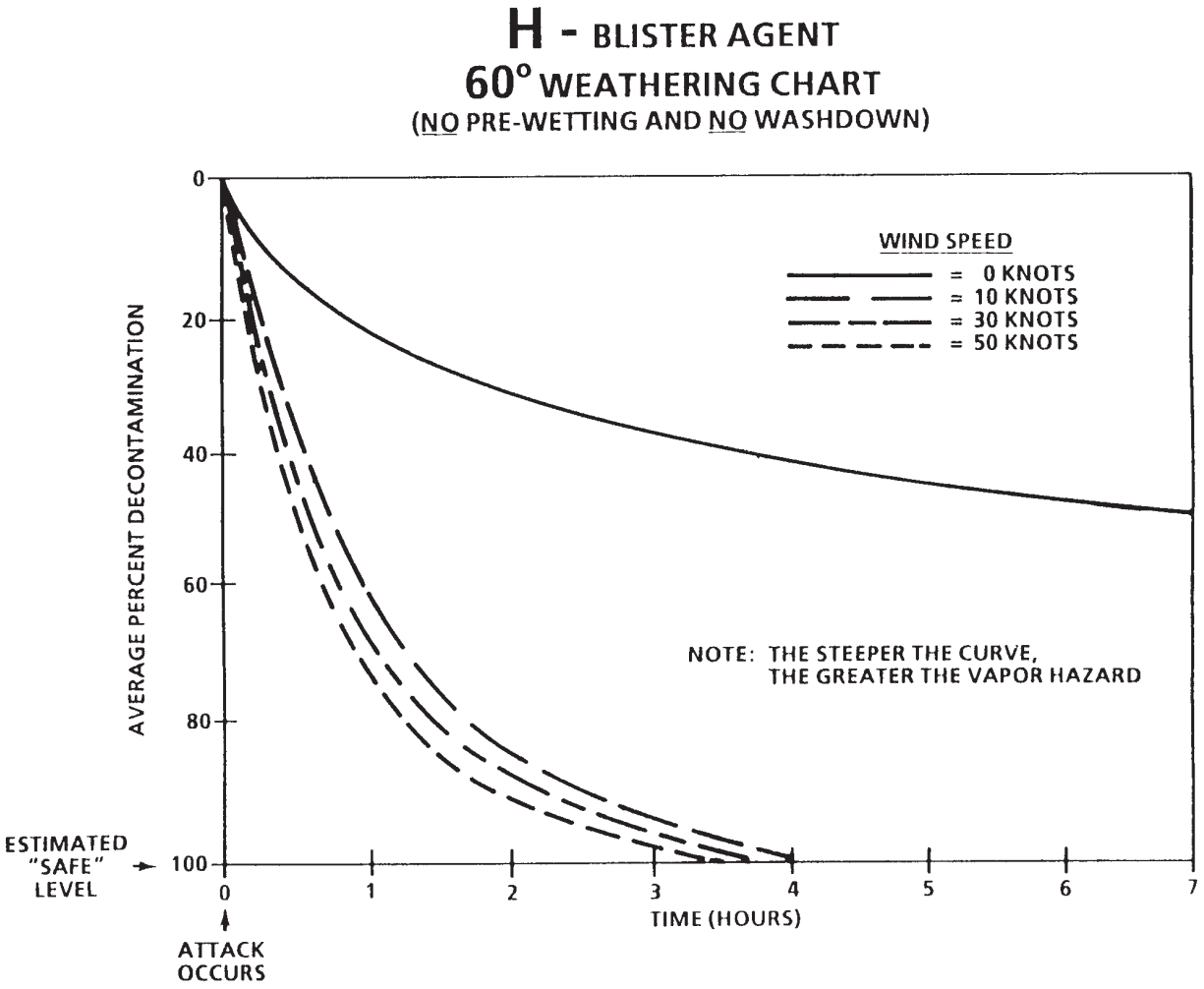

Figure 470–C–3. H Blister Agent Weathering Chart at 60˚F

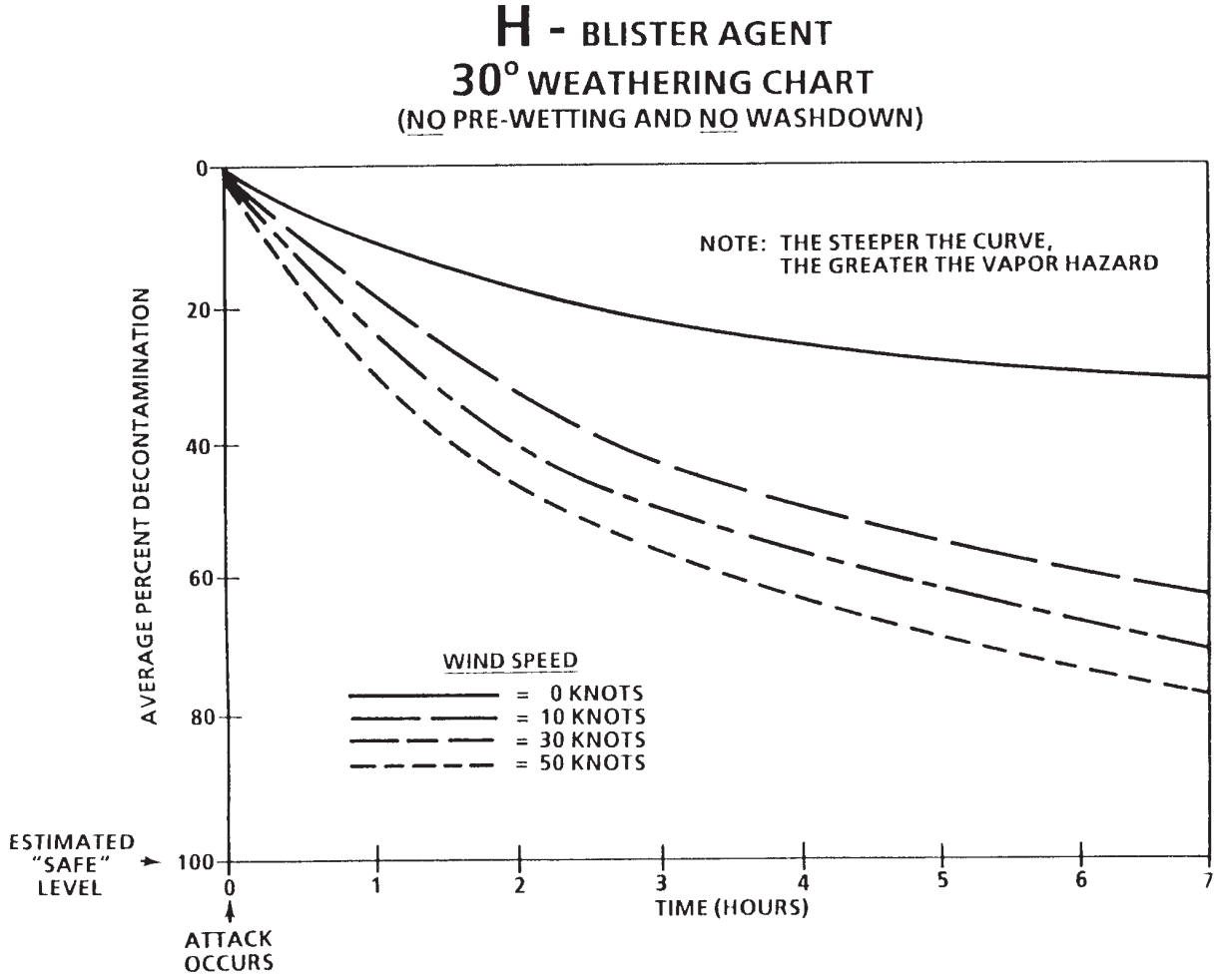

Figure 470–C–4. H Blister Agent Weathering Chart at 30˚F

f. G agents tend to be soluble or miscible (able to be mixed) in water.

NOTE

IMPORTANT: The information in the hazard duration chart (Table 470–C–2 and Figure 470–C–5 to Figure 470–C–7) is based on GD (Soman). Of the G agents, GD has medium volatility. GA is less volatile than GD (evaporates slower, and hazard duration is longer, approximately that of H agents). GB is more volatile than GD (evaporates faster, hazard duration is shorter). All are assumed to be thickened (relative volatility is unchanged).

470–C.15.2 RECOMMENDED ACTIONS FOR G AGENTS.

NOTE

At 90°F and winds above 5 knots, CMWD might not be advantageous from a time standpoint. The time savings and the fact that CMWD can reduce hazard **level** if not duration, must be weighed against the impact on shipboard operations.

Pre-wet decks to assist in removal of agent. Select 1 or 2 based on environmental conditions:

1. HOT OR WARM (ABOVE 60°F) WITH SUNNY OR MOSTLY SUNNY SKIES:

a. Activate CMWD system for 15 minutes while proceeding at the maximum speed the mission allows, in a zig-zag pattern (primarily into the wind).

b. Maneuver to provide a relative wind of 5 to 10 knots across the deck for times predicted on Table 470–C–2. Note that solar heating outweighs wind evaporation for agent weathering under these warm, sunny conditions; higher winds may cool the deck and lessen evaporation.

2. ALL OTHER ENVIRONMENTAL CONDITIONS:

a. Activate CMWD system for 15 minutes while proceeding at the maximum speed the mission allows, in a zig-zag pattern (primarily into the wind).

b. Continue to proceed into the wind at maximum speed the mission allows. Note that the effects of wind evaporation outweigh solar heating for agent evaporation under these cooler or cloudier conditions.

470–C.16 V AGENT

470–C.16.1 DESCRIPTION.

a. V is the most persistent of CW agents because of its low volatility (evaporates very slowly). Because off-gassing of deposited liquid is slow, low levels of vapor are produced. V will soak into deck surfaces to some extent.

b. V agents deposited on dry decks could remain a hazard for a very long time (days or weeks). Agent soaked into paint and non-skid surfaces will probably be a long-term hazard, and some agent may remain indefinitely.

c. Use of the washdown system post-attack will remove some surface agent and decrease the amount that soaks in, but hazard duration will still be about 5 days.

d. Pre-wetting the decks so they are wet at the time of the attack will prevent most agent from soaking in. This will significantly minimize the persistency, bringing it down to the order of several hours.

Table 470–C–2. G–NERVE AGENT: ESTIMATE OF HAZARD DURATION (HOURS: MINUTES)

Countermeasure Washdown (CMWD) Situation	Wind Across Deck Area (Knots)	Estimated Deck Temperature		
		30°F	60°F	90°F+
No Pre-Wet No Washdown	0 to 4	48:00 +	6:00	2:00
	5 to 20	3:00	0:45	0:35
	21 to 40	2:30	0:40	0:30
	Over 41	2:00	0:35	0:25
No Pre-Wet 15–Minute Washdown	0 to 4	18:00	2:15	1:15
	5 to 20	1:15	0:20	0:20
	21 to 40	1:15	0:20	0:20
	Over 41	1:00	0:20	0:20
Pre–Wet and 15–Minute Washdown	0 to 4	0:20	0:20	0:20
	5 to 20	0:20	0:20	0:20
	21 to 40	0:20	0:20	0:20
	Over 41	0:20	0:20	0:20

Instructions:

1. Select CMWD situation.
2. Align the wind speed with the estimated deck temperature to obtain the hazard duration **estimate**. Interpolation can be used for deck temperature.
3. See the following evaporation (weathering) curves for more information.

NOTE: CMWD system use is always beneficial. In some cases, CMWD system use may not significantly decrease the hazard **time**, but it does significantly decrease the hazard **amount**.

NOTE: This table covers only major exterior deck surfaces (nonskid and alkyd enamel paint). Other materials (canvas, lines, radars, etc.) are **not** taken into account

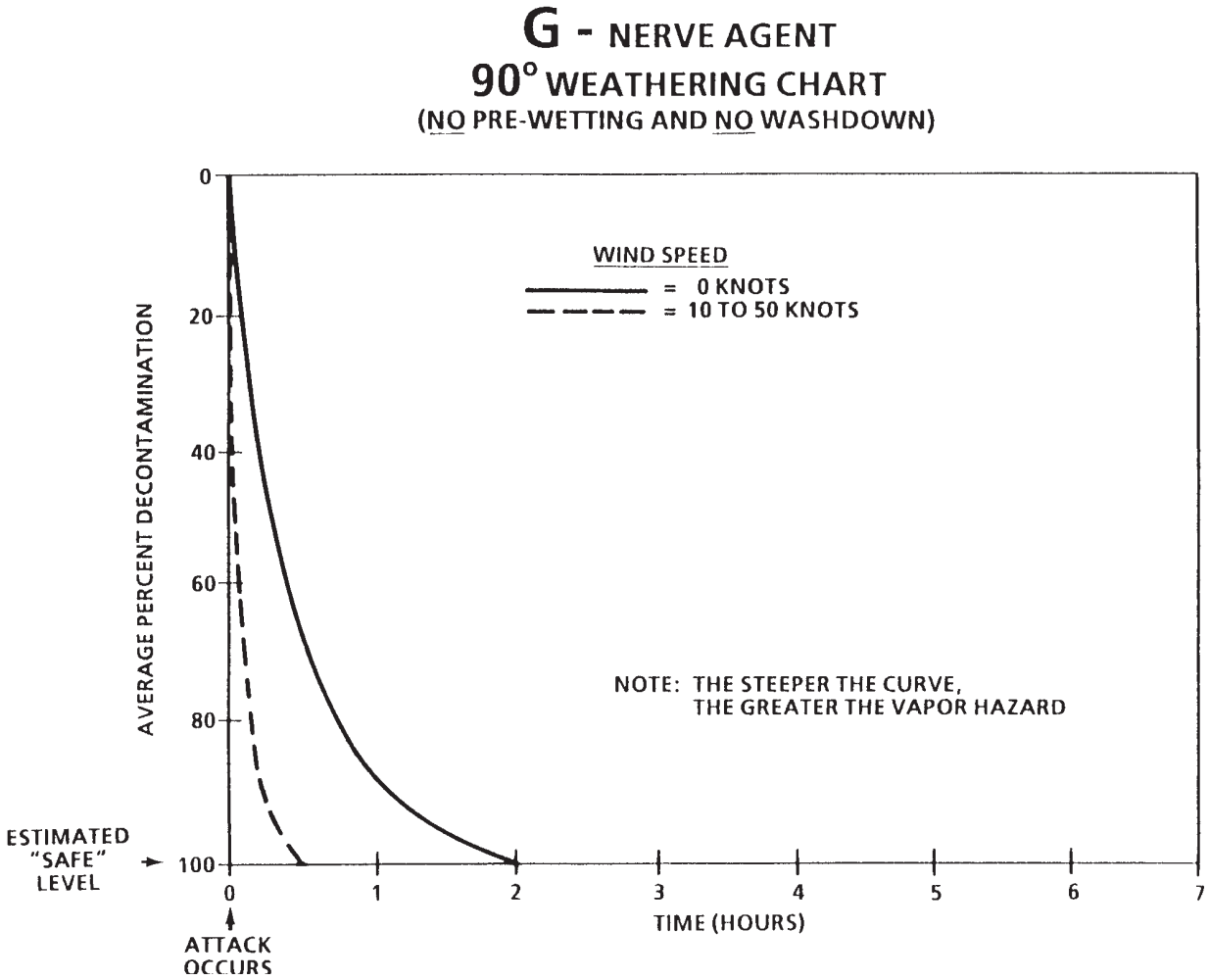

Figure 470–C–5. G Nerve Agent Weathering Chart at 90˚F

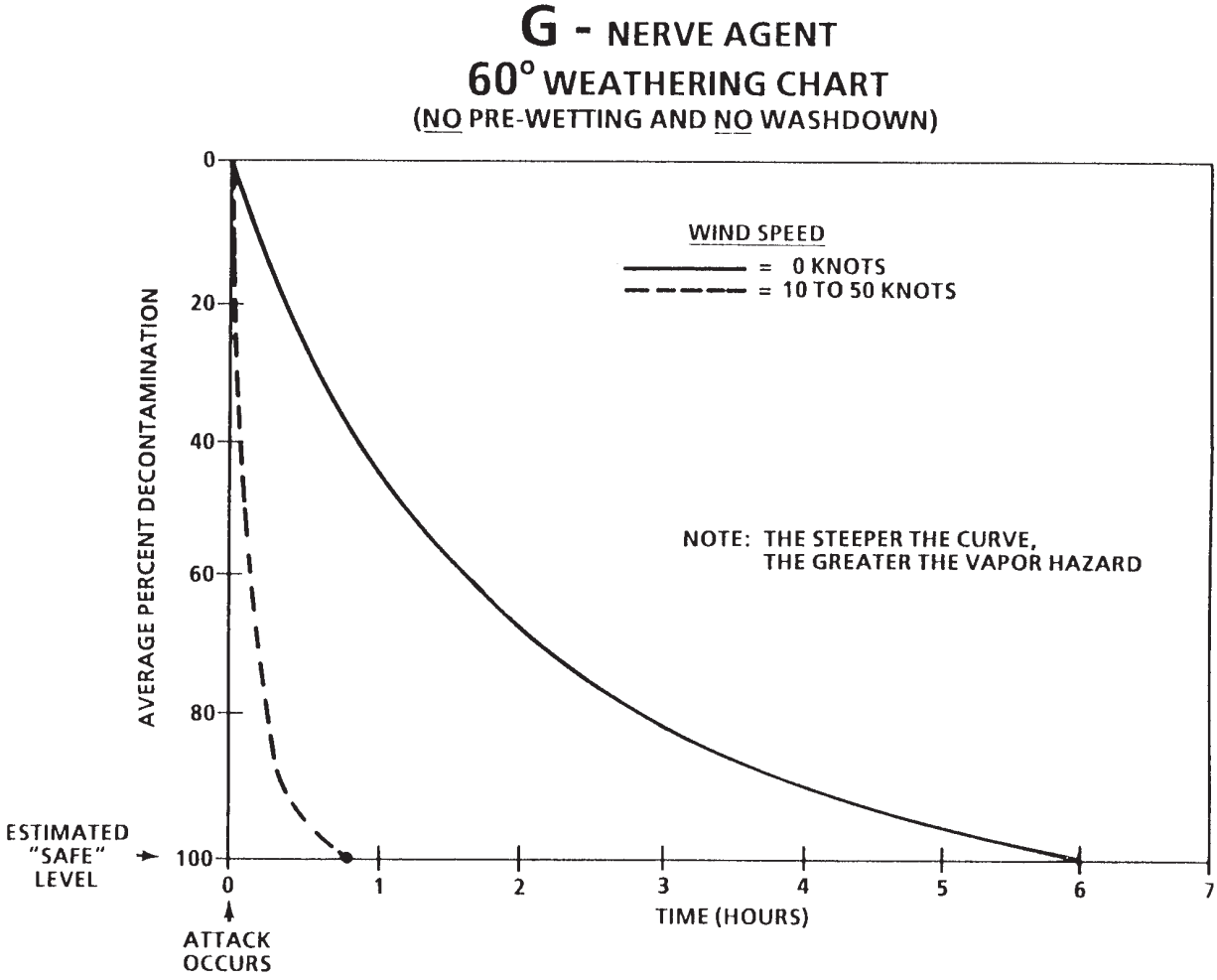

Figure 470–C–6. G Nerve Agent Weathering Chart at 60°F

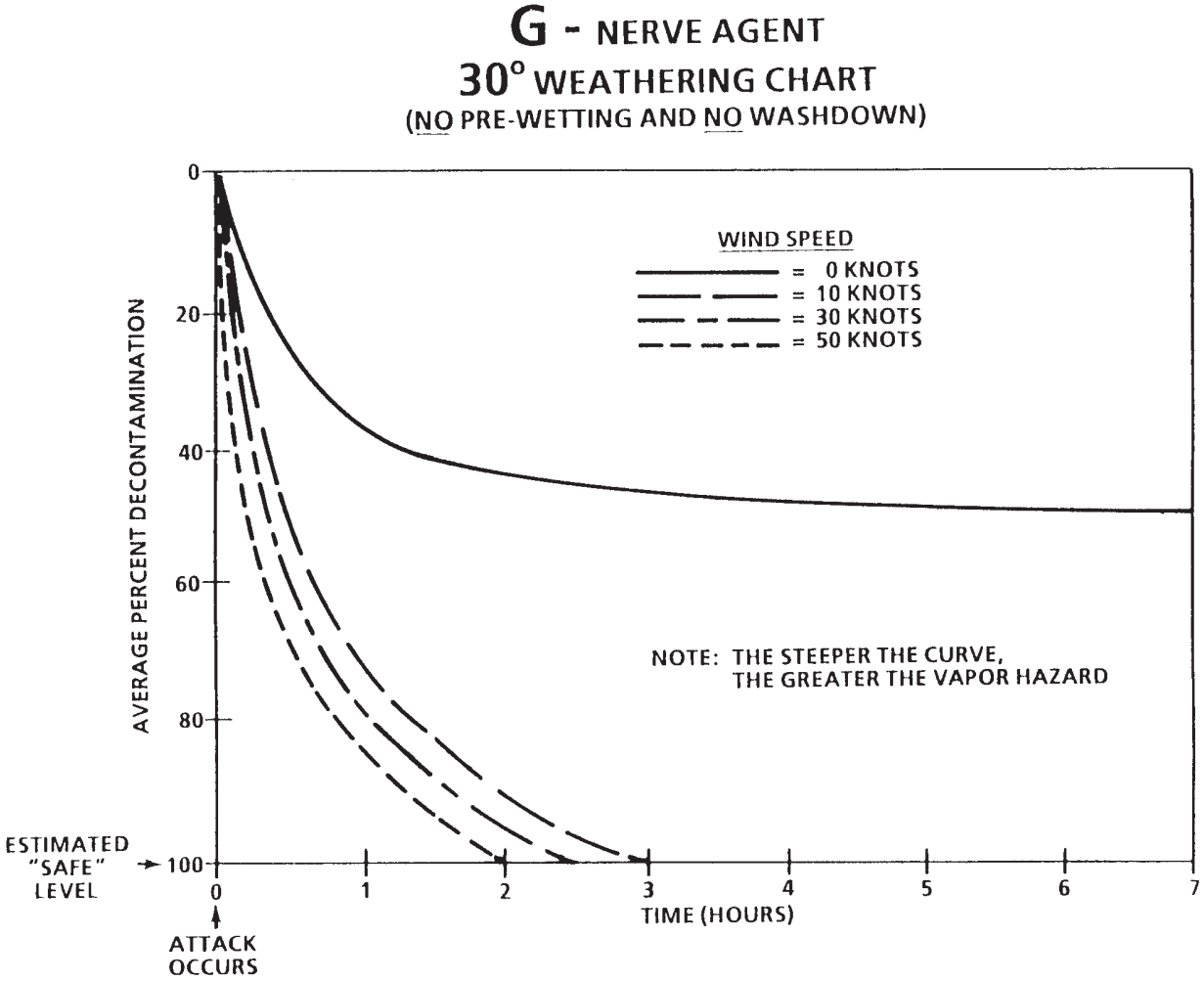

Figure 470–C–7. G Nerve Agent Weathering Chart at 30°F

e. CMWD use at temperatures below 49°F should be very effective at reducing hazard duration, because V agents are completely miscible (capable of being mixed) in water at these temperatures (no time estimate available).

f. Table 470–C–3 assumes some relative wind; at essentially no wind, hazard duration could be much longer than indicated. While extended periods of time with essentially no relative wind are unlikely to occur, ship speed should be adjusted to prevent this situation.

NOTE

Quantitative data for VX is incomplete at this time, so no graphs are presented.

470–C.16.2 RECOMMENDED ACTIONS FOR V AGENT.

1. Pre-wet with CMWD. This is extremely helpful. While agent used in attack cannot be predicted, if V is a possibility, pre-wetting should be practiced.

2. Post-attack, run the CMWD for up to an hour to remove as much agent as possible. Maneuver to help distribute relative wind and CMWD water to all exterior deck areas.

3. When time and conditions allow, scrub deck areas with decontaminant and rinse with seawater. Decon is more effective the sooner it is done.

Table 470–C–3. V–NERVE AGENT: ESTIMATE OF HAZARD DURATION

Countermeasure Washdown (CMWD) Situation	Estimated Deck Temperature		
	30°F	**60°F**	**90°F+**
No Pre-Wet No Washdown	Weeks-Months	About 10 Days	About 6 Days
No Pre-Wet 15–Minute Washdown	* (No Data)	About 5 Days	About 5 Days
Pre–Wet and 15–Minute Washdown	Several Hours Or Less *	Several Hours	Several Hours

* Use of CMWD should be very effective at reducing hazard duration for temperatures below 49°F, as v agents are completely miscible in water at these temperatures.

NOTE: If there is essentially no wind, hazard duration could be weeks or months. Higher relative wind speeds at a given deck temperature will yield slightly faster weathering.

NOTE: CMWD system use is always beneficial. In some cases, CMWD system use may not significantly decrease the hazard **time**, but it does significantly decrease the hazard **amount**.

NOTE: This table covers only major exterior deck surfaces (nonskid and alkyd enamel paint). Other materials (canvas, lines, radars, etc.) are **not** taken into account.

APPENDIX D.
CHEMICAL AGENT AND RIOT CONTROL COMPOUND DATA SHEETS

CHEMICAL AGENT DATA SHEET

AGENT. Tabun (GA)

AGENT CATEGORY.

Physiological effects:	Nerve agent
Military use:	Casualty agent
Duration of hazard:	Persistent
Route of entry:	Percutaneous
Onset of effects:	Quick acting

PHYSICAL STATE. In storage and in filled munitions, GA is a liquid. It vaporizes very slowly at moderate temperatures, much more slowly than other G series agents except GF. GA vapor is 5.63 times heavier than air, so it may collect in low and poorly ventilated areas.

DETECTION AND IDENTIFICATION.

Sensory Detection and Identification:	Tabun is brownish or colorless as a liquid. Its vapor is colorless. Pure GA is odorless but manufacturing impurities can give it a slightly fruity odor.
Liquid Detection and Identification:	M8 paper detects and identifies as G–series nerve agent; M9 paper detects.
Vapor Detection and Identification:	CAPDS and IPDS detect and identify as nerve agent (IPDS also identifies as G series); M256A1 detects and identifies as nerve agent.

PHYSIOLOGICAL SYMPTOMS. The following symptoms can appear in various combinations and sequences based on the dose received and route of entry.

Eyes:	The pupils shrink, interfering with vision in dim light and with peripheral vision. This effect is more likely due to inhalation or direct eye exposure than from a percutaneous dose.
Involuntary muscles and glands:	Difficulty in breathing, drooling, excessive sweating, vomiting, diarrhea, involuntary urination.
Skeletal muscles:	Fatigue, weakness, muscle twitching.
Central nervous system:	Headache, confusion, convulsions, coma. Finally, cessation of breathing and death.

TOXICITY. GA is a percutaneous hazard as a liquid or a gas. Lethal doses by respiration kill in 1–10 minutes. GA is more toxic to the eyes than to the skin. Liquid agent on the eye can kill almost as rapidly as inhalation. Liquid GA does not injure the skin but penetrates rapidly and is extremely toxic. A lethal dose can be absorbed through the skin in 1–2 minutes and can cause local effects quickly but death may not occur for 1–2 hours.

AGENT. Tabun (GA) Continued

Eye Effect:		3.2 mg/m^3 is minimum detectable vapor concentration.
Inhalation:	ICT_{50}	300 mg–min/m^3 for resting men
(vapor)	LCT_{50}	400 mg–min/m^3 for resting men
Skin Effect:	ICT_{50}	not known(vapor)
	LCT_{50}	not known, but estimated to be between 20,000 and 40,000 mg–min/m^3
Skin Effect: (liquid)	LD_{50}	1–1.5 g/man

DETOXIFICATION. In contrast to other nerve agents, the body can detoxify GA. The rate is slow but noticeable.

VARIANTS. None.

INTERACTION WITH SHIPBOARD MATERIALS. None.

PROTECTIVE CLOTHING AND EQUIPMENT. Protective mask and clothing required. Ordinary clothing sorbs GA vapor and it continues to offgas for about 30 minutes after exposure. This must be considered in unmasking and allowing exposed clothing inside the ship.

DECONTAMINATION. Immediate decontamination of the smallest drop liquid agent on the skin is essential. The M291 Skin Decontamination Kit can be used for this purpose. The primary decontamination method for ship structure and equipment is oxidation by bleaches, such as calcium hypochlorite (HTH). Hot, soapy water can be used if bleach is not available.

FLAMMABILITY. Flash point is 172°F. GA could be ignited by large explosive charges.

SUMMARY: GA was the first of the nerve agents developed. More toxic nerve agents have been developed but GA is still considered to be viable for tactical use. It is one of the most persistent of unthickened G–series agents.

CHEMICAL AGENT DATA SHEET

AGENT. Sarin (GB)

AGENT CATEGORY.

Physiological effects:	Nerve agent
Military use:	Casualty agent
Duration of hazard:	Persistent
Route of entry:	Percutaneous
Onset of effects:	Quick acting

PHYSICAL STATE. GB is the most volatile of the nerve agents. It normally acts as a vapor. Its vapors are 4.86 times heavier than air and may collect in low or poorly ventilated areas.

DETECTION AND IDENTIFICATION.

Sensory Detection and Identification:	GB has almost no odor when pure. It is colorless in both the liquid and the vapor state.
Liquid Detection and Identification:	M8 paper detects and identifies as G–series nerve agent; M9 paper detects. However, GB is not likely to be encountered in liquid form except for a direct hit or near miss.
Vapor Detection and Identification:	CAPDS and IPDS detect and identify as nerve agent (IPDS also identifies as G series); M256A1 detects and identifies as nerve agent.

PHYSIOLOGICAL SYMPTOMS. The following symptoms can appear in various combinations and sequences based on the dose received and route of entry.

Eyes:	The pupils shrink, interfering with vision in dim light and with peripheral vision. This effect is more likely due to inhalation or direct eye exposure than from a percutaneous dose.
Involuntary muscles and glands:	Difficulty in breathing, drooling, excessive sweating, vomiting, diarrhea, involuntary urination.
Skeletal muscles:	Fatigue, weakness, muscle twitching.
Central nervous system:	Headache, confusion, convulsions, coma.
Finally, cessation of breathing and death.	

TOXICITY. The toxicity of GB is very high. It is more toxic through the eye than through skin. Death usually occurs within 15 minutes after a fatal dose has been absorbed.

AGENT. Sarin (GB) Continued

Eye Effect: (vapor)	ICT_{50}	10 mg–min/m^3 Myosis in still air
Inhalation: (vapor)	ICT_{50} LCT_{50}	75 mg–min/m^3 for men resting 100 mg–min/m^3 for men resting
Dry Skin Effect: (vapor)	ICT_{50} LCT_{50}	8,000 mg–min/m^3 for ordinary clothing 15,000 mg–min/m_3 for battle dress
Skin Effect: (liquid)	LD_{50}	1.7 g/man

DETOXIFICATION. The detoxification rate of GB is low, essentially cumulative.

VARIANTS. None.

INTERACTION WITH SHIPBOARD MATERIALS. Slightly corrosive to steel. Persistency in rubber and paint is unknown.

PROTECTIVE CLOTHING AND EQUIPMENT. Protective mask and clothing required. Ordinary clothing sorbs GB vapor and it continues to offgas for about 30 minutes after exposure. This must be considered in unmasking and allowing exposed clothing inside the ship.

DECONTAMINATION. Immediate decontamination of the smallest drop liquid agent on the skin is essential. The M291 Skin Decontamination Kit can be used for this purpose. The primary decontamination method for ship structure and equipment is oxidation by bleaches, such as calcium hypochlorite (HTH). Hot, soapy water can be used if bleach is not available.

FLAMMABILITY. Nonflammable

SUMMARY: This is a quick acting, nonpersistent, percutaneous nerve agent which is very effective as a toxic inhalant. It is less effective as a liquid skin penetrant because it evaporates from the skin more readily than other nerve agents.

CHEMICAL AGENT DATA SHEET

AGENT. Soman (GD)

AGENT CATEGORY.

Physiological effects:	Nerve agent
Military use:	Casualty agent
Duration of hazard:	Persistent
Route of entry:	Percutaneous
Onset of effects:	Quick acting

PHYSICAL STATE. In storage and in filled munitions, GD is normally a liquid. It vaporizes slowly at moderate temperatures. Its vapor is 6.33 times denser than air, so it will settle in low and poorly ventilated spaces. The freezing point is low enough that it is not a consideration.

DETECTION AND IDENTIFICATION.

Sensory Detection and Identification:	Both GD liquid and vapor are colorless. its odor is fruity. Impurities may give off camphor odor.
Liquid Detection and Identification:	M8 paper detects and identifies as G–series nerve agent; M9 paper detects.
Vapor Detection and Identification:	CAPDS and IPDS detect and identify as nerve agent (IPDS also identifies as G series); M256A1 detects and identifies as nerve agent.

PHYSIOLOGICAL SYMPTOMS. The following symptoms can appear in various combinations and sequences based on the dose received and route of entry.

Eyes:	The pupils shrink, interfering with vision in dim light and with peripheral vision. This effect is more likely due to inhalation or direct eye exposure than from a percutaneous dose.
Involuntary muscles and glands:	Difficulty in breathing, drooling, excessive sweating, vomiting, diarrhea, involuntary urination.
Skeletal muscles:	Fatigue, weakness, muscle twitching.
Central nervous system:	Headache, confusion, convulsions, coma.
Finally, cessation of breathing and death.	

TOXICITY. GD is a percutaneous hazard as a liquid or a gas. Lethal doses by respiration kill in 1–10 minutes. Liquid agent on the eye can kill almost as rapidly. Liquid GD does not injure the skin but penetrates rapidly and is extremely toxic. A lethal dose can be absorbed through the skin in 1–2 minutes and can cause local effects quickly but death may not occur for 1–2 hours.

AGENT. Soman (GD) Continued

Inhalation: (vapor)	ICT_{50} LCT_{50}	75–300 mg–min/m^3 100–400 mg–min/m^3
Skin Effect: (vapor)	ICT_{50} LCT_{50}	not known
Skin Effect:	ID_{50} LD_{50}	not known

DETOXIFICATION. Rate of detoxification is very low. The effect of GD exposure is essentially cumulative.

VARIANTS. Thickeners can be added to increase GD's persistency and, thus, the difficulty of decontamination. Thickened GD is identified by the symbols, TGD and VR55.

INTERACTION WITH SHIPBOARD MATERIALS. GD is slightly corrosive to metals.

PROTECTIVE CLOTHING AND EQUIPMENT. The protective mask and permeable protective clothing are required for vapor and small droplets. Impermeable protective clothing is required for protection against heavier liquid concentrations. Ordinary clothing sorbs GD vapor and it continues to offgas for about 30 minutes after exposure. This must be considered in unmasking and allowing exposed clothing inside the ship.

DECONTAMINATION. Immediate decontamination of the smallest drop liquid agent on the skin is essential. The M291 Skin Decontamination Kit can be used for this purpose. The primary decontamination method for ship structure and equipment is oxidation by bleaches, such as calcium hypochlorite (HTH). Hot, soapy water can be used if bleach is not available.

FLAMMABILITY. The flash point of GD is high enough that flammability is not a military consideration in explosive dispersal.

SUMMARY: Soman was invented shortly after World War II but it remains one of the most effective chemical agents because of its high toxicity and persistence.

CHEMICAL AGENT DATA SHEET

AGENT. GF

AGENT CATEGORY.

Physiological effects:	Nerve agent
Military use:	Casualty agent
Duration of hazard:	Persistent
Route of entry:	Percutaneous
Onset of effects:	Quick acting

PHYSICAL STATE. In storage and in filled munitions, GF is a liquid. It vaporizes very slowly at moderate temperatures, much more slowly than other G series agents except for GA. The persistency of GF is about the same as that of GA. GF vapor is 6.2 times heavier than air, so it may collect in low and poorly ventilated areas.

DETECTION AND IDENTIFICATION.

Sensory Detection and Identification:	GF has a sweet odor like that of musty peaches or shellac.
Liquid Detection and Identification:	M8 paper detects and identifies as G–series nerve agent; M9 paper detects.
Vapor Detection and Identification:	CAPDS and IPDS detect and identify as nerve agent (IPDS also identifies as G series); M256A1 detects and identifies as nerve agent.

PHYSIOLOGICAL SYMPTOMS. The following symptoms can appear in various combinations and sequences based on the dose received and route of entry.

Eyes:	The pupils shrink, interfering with vision in dim light and with peripheral vision. This effect is more likely due to inhalation or direct eye exposure than from a percutaneous dose.
Involuntary muscles and glands:	Difficulty in breathing, drooling, excessive sweating, vomiting, diarrhea, involuntary urination.
Skeletal muscles:	Fatigue, weakness, muscle twitching.
Central nervous system:	Headache, confusion, convulsions, coma.
Finally, cessation of breathing and death.	

TOXICITY. Limited information available but comparable to other G–series nerve agents.

DETOXIFICATION. GF is detoxified at a low rate.

VARIANTS. None.

INTERACTION WITH SHIPBOARD MATERIALS. Probably similar to other G–series nerve agents.

PROTECTIVE CLOTHING AND EQUIPMENT. The protective mask and permeable protective clothing are required for vapor and small droplets. Impermeable protective clothing is required for protection against heavier liquid concentrations. Ordinary clothing may sorb GF vapor and, if so, it continues to offgas for about 30 minutes after exposure. This must be considered in unmasking and allowing exposed clothing inside the ship.

AGENT. GF (Continued)

DECONTAMINATION. Immediate decontamination of the smallest drop liquid agent on the skin is essential. The M291 Skin Decontamination Kit can be used for this purpose. The primary decontamination method for ship structure and equipment is oxidation by bleaches, such as calcium hypochlorite (HTH). Hot, soapy water, is specified for the decontamination of other nerve agents if bleach is not available. However, it may not be very useful for decontaminating GF because of its extremely low solubility.

FLAMMABILITY. Flash Point is about 201˚F, low enough to ignite if explosive charge yield is above normal or to burn in a fire.

SUMMARY: The advantages and disadvantages of GF as a potential chemical agent are similar to those of GA.

CHEMICAL AGENT DATA SHEET

AGENT. VX

AGENT CATEGORY.

Physiological effects:	Nerve agent
Military use:	Casualty agent
Duration of hazard:	Persistent
Route of entry:	Percutaneous
Onset of effects:	Quick acting

PHYSICAL STATE. VX is one of the most persistent of all chemical agents. It normally acts as a liquid. Its evaporation rate is very low. The vapors are 9.2 times heavier than air and will settle in low and poorly ventilated areas.

DETECTION AND IDENTIFICATION.

Sensory Detection and Identification:	VX is an odorless, amber colored liquid, similar in appearance to motor oil.
Liquid Detection and Identification:	M8 paper detects and identifies as V–series nerve agent; M9 paper detects.
Vapor Detection and Identification:	CAPDS, IPDS and CWDD detect and identify as nerve agent (IPDS also identifies as V series); M256A1 detects and identifies as nerve agent.

PHYSIOLOGICAL SYMPTOMS. Death usually occurs within 15 minutes after a fatal dosage is absorbed. Liquid does not injure the skin or eyes but penetrates them rapidly.

TOXICITY. The toxicity of VX is substantially greater than that of G–series nerve agents.

Eye Effect: (vapor)	ICT_{50}	0.04 mg–min/m^3 Myosis in still air
Inhalation: (vapor)	ICT_{50} LCT_{50}	50 mg–min/m^3 (resting), 24 mg–min/m^3 (mild activity) 100 mg–min/m^3 (resting), 30 mg–min/m^3 (mild activity)
Skin Effect: (vapor)	LCT_{50} LCT_{50}	6 to 360 mg–min/m^3 (bare skin) 6 to 3600 mg–min/m^3 (clothed)
Skin Effect: (liquid)	LD_{50}	10 mg/man (bare skin)

DETOXIFICATION. The detoxification rate of VX is very low, essentially cumulative

VARIANTS. V_x, called “V sub x”, is a more volatile variant. However, it’s volatility is still well below that of the G–series nerve agents.

INTERACTION WITH SHIPBOARD MATERIALS. VX has a negligible effect on brass, steel and aluminum.

PROTECTIVE CLOTHING AND EQUIPMENT. The protective mask and permeable protective clothing are required for vapor and small droplets. Impermeable protective clothing is required for protection against heavier liquid concentrations.

AGENT. VX Continued

DECONTAMINATION. Immediate decontamination of the smallest drop liquid agent on the skin is essential. The M291 Skin Decontamination Kit can be used for this purpose. The primary decontamination method for ship structure and equipment is oxidation by bleaches, such as calcium hypochlorite (HTH). Hot, soapy water can be used if bleach is not available.

FLAMMABILITY. The flash point of VX is 318˚F.

SUMMARY: VX is a very lethal persistent, percutaneous nerve agent. Because of its low volatility, it is difficult to achieve high vapor concentrations. Skin absorption is a more likely route of VX exposure than inhalation. This absorption is more likely to occur from aerosol or liquid than from vapor.

CHEMICAL AGENT DATA SHEET

AGENT. Distilled Mustard (HD)

AGENT CATEGORY.

Physiological effects:	Blister agent
Military use:	Casualty agent
Duration of hazard:	Persistent
Route of entry:	Percutaneous
Onset of effects:	Quick acting

PHYSICAL STATE. The normal state of HD in storage or in filled munitions is as a heavy, oily liquid. Liquid agent vaporizes slowly at moderate temperatures. Mustard vapor is 5.4 times heavier than air and will settle in low or poorly ventilated spaces. Pure agent freezes at 58˚ F, but impurities can lower this figure several degrees.

DETECTION AND IDENTIFICATION.

Sensory Detection and Identification:	Impure mustard is transparent and amber colored. It's odor in high concentrations resembles garlic, onions, horseradish or mustard. In field concentrations, it is almost odorless.
Liquid Detection and Identification:	M8 paper detects and identifies as blister agent; M9 paper detects.
Vapor Detection and Identification:	IPDS detects and identifies as an H–series blister agent; M256A1 detects and identifies as an H–series blister agent.

PHYSIOLOGICAL SYMPTOMS. Initially, HD causes relatively mild irritation. The onset of more serious symptoms is delayed, usually four to six hours, depending on the dose received.

Eyes:	Minor eye effects (tears, irritation and sensitivity to light) may develop immediately. More serious damage becomes apparent later.
Skin:	Initially causes redness. Delayed effects are inflammation or blisters. Damp skin is more susceptible to injury as it promotes the spread of HD and increased absorption through the skin.
Respiratory Tract:	Initially, irritation of nose, throat, bronchial passages and trachia. Lung damage becomes apparent later.
Systemic Effects:	Similar to radiation sickness. May include apathy, headache, nausea, loss of appetite, stomach pain and anemia.

TOXICITY. HD is a percutaneous hazard in any physical state. Repeated exposure, even to low concentrations, can cause sensitization, which can result in a cumulative dose having more severe effects than a single dose of the same size.

AGENT. Distilled Mustard (HD) Continued

Eye Effect: (vapor)	ICT_{50}	200 mg–min/m^3
Inhalation: (vapor)	ICT_{50} LCT_{50}	150 mg–min/m^3 1500 mg–min/m^3
Dry Skin Effect: (vapor)	ICT_{50} LCT_{50}	2000 mg–min/m^3 10,000 mg–min/m^3
Wet Skin Effect: (perspiration)	ICT_{50}	1000 mg–min/m^3
Skin Effect:	LD_{50}	7 mg/man

DETOXIFICATION. Different references contain conflicting information. FM 3–9 states that the rate of detoxification is very low and that the effects of HD are essentially cumulative or worse. NAVMED P–5059, on the other hand, states that the process of detoxification of HD is rapid but that the healing of the damage it causes is very slow. Either way, the process of recovery is a long, slow one.

VARIANTS. Distilled Mustard (HD) is a sulfur compound made from Levenstein Mustard (H) by washing and vacuum distillation. This process removes sulfur impurities found in H. This causes HD to have less odor, more stability and a higher freezing point than H. There are also three forms of nitrogen mustard (HN–1, HN–2, HN–3). The persistence of HD can be increased by dissolving it in non–volatile thickening agents. Such a solution is called Thickened Mustard (THD). HD is also mixed with Lewisite (L) to form HL. Dusty mustard is another possible variant.

INTERACTION WITH SHIPBOARD MATERIALS. HD is slightly corrosive to metals, but the more pure it is, the less effect it has. It is able to penetrate the cell walls of tissue and a great number of materials including wood, leather, rubber, paint and non–skid.

PROTECTIVE CLOTHING AND EQUIPMENT. The protective mask and permeable protective clothing are adequate for Mustard vapor, aerosol and small droplets. Impermeable clothing is needed for protection against large droplets, splashes and smears of liquid HD.

DECONTAMINATION. The primary decontamination method is oxidation by bleaches, such as calcium hypochlorite. HD hydrolizes slowly in salt water. Its half–life is 60 minutes at 91˚ F. However, it must be dissolved in water before hydrolysis can take place, and its solubility is so low that this mechanism is not useful in decontamination. HD is soluble in organic solvents such as cleaning fluids (the residue is toxic). Thickeners can make physical removal very difficult. Liquid HD must be removed from the skin as soon as possible because time of contact is a very important determinant of the degree of injury that results. The M291 Skin Decontamination Kit can be used for this purpose.

FLAMMABILITY. Flash point is 219˚ F, low enough to ignite if explosive charge yield is above normal or to burn in a fire.

SUMMARY: Distilled mustard has been around for a long time but it remains the agent of choice in many tactical situations because of its persistency and the fact that even low concentrations force target personnel into protective clothing. HD injuries are slow to heal and susceptible to infection.

CHEMICAL AGENT DATA SHEET

AGENT. Nitrogen Mustard (HN–3)

AGENT CATEGORY.

Physiological effects:	Blister agent
Military use:	Casualty agent
Duration of hazard:	Persistent
Route of entry:	Percutaneous
Onset of effects:	Quick acting

PHYSICAL STATE. The normal state of HN–3 in storage or in filled munitions is as a dark liquid. Liquid HN–3 vaporizes more slowly than liquid HD at moderate temperatures. The vapor of HN–3 is 7.1 times heavier than air and it will settle in low or poorly ventilated spaces. HN–3 freezes at 25˚F. It's boiling point is 493ºF but it starts to decompose before it reaches this temperature.

DETECTION AND IDENTIFICATION.

Sensory Detection and Identification:	HN–3 is odorless if pure.
Liquid Detection and Identification:	M8 paper detects and identifies as blister agent; M9 paper detects.
Vapor Detection and Identification:	IPDS detects and identifies as a H–series blister agent; M256A1 detects and identifies as an H–series blister agent.

PHYSIOLOGICAL SYMPTOMS. Minor eye effects may develop immediately. The onset of more serious symptoms is delayed, usually four to six hours, depending on the dose received, but the effects of HN–3 become apparent more quickly than those of a comparable dose of HD. Repeated exposure, even to low concentrations, can cause sensitization, which can result in a cumulative dose having more severe effects than a single dose of the same size.

Eyes:	Minor eye effects (tears, irritation and sensitivity to light) may develop immediately. More serious damage becomes apparent later.
Skin:	Inflammation or blisters.
Respiratory Tract:	Lung damage is possible but less likely than with HD due to lower volatility.
Systemic Effects:	Similar to radiation sickness. May include apathy, headache, nausea, loss of appetite, stomach pain and anemia.

TOXICITY. HN–3 is a percutaneous hazard in any physical state.

Eye Effect: (vapor)	ICT_{50}	200 mg–min/m^3
Inhalation: (vapor)	ICT_{50} LCT_{50}	not known 1500 mg–min/m^3
Skin Effect: (vapor)	ICT_{50} LCT_{50}	2500 mg–min/m^3 10000 mg–min/m^3
Skin Effect: (liquid)	LD_{50}	0.7 g/man

AGENT. Nitrogen Mustard (HN–3) Continued

DETOXIFICATION. Different references contain conflicting information. FM 3–9 states that HN–3 is not detoxified in the body and that the effects are cumulative. NAVMED P–5059, on the other hand, states that the process of detoxification of the mustards, as a group, is rapid but that the healing of the damage it causes is very slow. Either way, the process of recovery is a long, slow one.

VARIANTS. HN–3 is considered to be the most suitable of the nitrogen mustards for use in chemical warfare. Its vapor toxicity is comparable to that of HD and it is more persistent. The toxicity of liquid HN–3 is greater than that of HD. The toxicity of HN–1 is somewhat lower and its volatility significantly higher than either HD or HN–3. Therefore, it would be harder to maintain a sufficient concentration of HN–1 on target long enough to achieve the desired effect. HN–2 is highly unstable and decomposes readily, even in storage.

INTERACTION WITH SHIPBOARD MATERIALS. Under some conditions, HN–3 is slightly corrosive to metals. The more pure and dry HN–3 is, the less effect it has on metals. It is able to penetrate the cell walls of tissue and a great number of materials including wood, leather, rubber, paint and non–skid.

PROTECTIVE CLOTHING AND EQUIPMENT. The protective mask and permeable protective clothing such as the Chemical Protective Overgarment (CPO) are adequate for Mustard vapor, aerosol and small droplets. Impermeable clothing is needed for protection against large droplets, splashes and smears of liquid HN–3.

DECONTAMINATION. The primary decontamination method is oxidation by bleaches, such as calcium hypochlorite, although HN–3 is oxidized more slowly than HD. HN–3 hydrolizes in water. However, it must be dissolved before hydrolysis can take place, and its solubility in water is low. The solubility of HN–3 can be increased by using hot water to make the calcium hypochlorite solution. If calcium hypochlorite is not available, soap or detergent can be used to make an alkaline solution with hot water. Liquid HN–3 must be removed from the skin as soon as possible because time of contact is a very important determinant of the degree of injury that results. The M291 Skin Decontamination Kit can be used for this purpose.

FLAMMABILITY. The flash point of HN–3 is high enough not to interfere with military operations.

SUMMARY: Like HD, HN–3 is useful in many tactical situations because of its persistency and the fact that even low concentrations force target personnel into protective clothing. HN–3 injuries are slow to heal and susceptible to infection. HD might be preferred in moderate temperatures because, although persistent, it is more volatile than HN–3 and can produce a greater vapor hazard while remaining a contact hazard. However, HN–3 might be favored at extreme temperatures. It would be more useful if persistency is desired at high temperatures. Also, since HD freezes at about 58˚F, HN–3 can be used more effectively at lower temperatures.

CHEMICAL AGENT DATA SHEET

AGENT. Lewisite (L)

AGENT CATEGORY.

Physiological effects:	Blister agent
Military use:	Casualty agent
Duration of hazard:	Persistent
Route of entry:	Percutaneous
Onset of effects:	Immediate stinging Delayed blistering

PHYSICAL STATE. Lewisite is a moderately volatile blister agent which is a liquid at room temperature. In a liquid state it has low water solubility, but as a vapor it is readily hydrolyzed when in contact with moisture. This makes it difficult in high humidity conditions to maintain a concentration of Lewisite vapor sufficient to blister the skin. The product of hydrolysis is a solid, blister–causing oxide that is very persistent and is difficult to wash away. Lewisite vapor is 7.1 times heavier than air so, in low humidity conditions, it will settle in low or poorly ventilated spaces. The freezing point ranges from –64˚F to 32˚F, depending on which impurities are present.

DETECTION AND IDENTIFICATION.

Sensory Detection and Identification:	Lewisite is a dark oily liquid at moderate temperatures. Its odor is like geraniums. It has very little odor when pure. Irritation of the eyes and skin and gives warning of its presence.
Liquid Detection and Identification:	M8 paper detects and identifies as a blister agent. M9 paper detects.
Vapor Detection and Identification:	M256A1 detects and specifically identifies Lewisite.

PHYSIOLOGICAL SYMPTOMS.

Eyes:	Immediate pain and inflammation. Exposure to liquid L causes loss of sight if not decontaminated with water in one minute.
Skin:	Immediate pain, reddening within 30 minutes. Blisters appear about 13 hours later.
Respiratory Tract:	Sneezing and irritation of the upper respiratory tract.
Systemic Effects:	Fluid in lungs, diarrhea, weakness and subnormal body temperature.

TOXICITY. L is a percutaneous hazard in any physical state. However, the vapor hydrolizes rapidly in high humidity.

Eye Effect: (vapor)	ICT_{50}	Less than 300 mg–min/m^3 (extreme irritation), 1500 mg–min/m^3 (severe damage)
Inhalation: (vapor)	LCT_{50}	1400 mg–min/m^3
Skin Effect: (vapor)	LCT_{50} ICT_{50}	100,000 mg–min/m^3 Over 1500 mg–min/m^3
Skin Effect: (liquid)	LD_{50}	30 mg/kg

AGENT. Lewisite (L) Continued

DETOXIFICATION. Lewisite is not detoxified in the body.

VARIANTS. Lewisite is mixed with Distilled Mustard to form HL.

INTERACTION WITH SHIPBOARD MATERIALS. None if (L) is dry. Hydrolysis products may interact with metals in wet conditions.

INTERACTION WITH PROTECTIVE CLOTHING AND EQUIPMENT. The protective mask and permeable protective clothing are required for vapor and small droplets. Impermeable protective clothing is required for protection against heavier liquid concentrations.

DECONTAMINATION. Immediate decontamination of the smallest drop liquid agent on the skin is essential. The M291 Skin Decontamination Kit can be used for this purpose. The primary decontamination method for ship structure and equipment is oxidation by bleaches, such as calcium hypochlorite (HTH). Hot, soapy water can be used if bleach is not available. Lewisite is soluble in organic solvents such as cleaning fluids (the residue is toxic).

FLAMMABILITY. Lewisite has no flash point.

SUMMARY: Lewisite is more volatile than distilled mustard and produces symptoms quicker. The skin burns produced by Lewisite are deeper. However, Lewisite vapor hydrolizes so rapidly in high humidity that it is difficult to maintain a harmful concentration on target.

CHEMICAL AGENT DATA SHEET

AGENT. Mustard–Lewisite Mixture (HL)

AGENT CATEGORY.

Physiological effects:	Blister agent
Military use:	Casualty agent
Duration of hazard:	Persistent
Route of entry:	Percutaneous
Onset of effects:	Immediate stinging Delayed blistering

PHYSICAL STATE. HL is a dark, oily liquid at moderate temperatures. Its volatility is lower than that of Lewisite but higher than Distilled Mustard. The vapor is 6.5 times heavier than air and will tend to settle in low or poorly ventilated spaces. The freezing point is –77˚F or below.

DETECTION AND IDENTIFICATION.

Sensory Detection and Identification:	HL is a dark, oily liquid at moderate temperatures. It has a garlic–like odor.
Liquid Detection and Identification:	M8 paper detects and identifies the HD in the mixture as an H–series agent. M9 paper detects the HD.
Vapor Detection and Identification:	M256A1 detects and specifically identifies Lewisite. It also detects and identifies HD vapor as an H–series agent.

PHYSIOLOGICAL SYMPTOMS.

Eyes:	Immediate pain and inflammation. Exposure to liquid HL causes severe damage.
Skin:	Immediate pain, reddening within 30 minutes. Blisters appear about 13 hours later.
Respiratory Tract:	Inhaling vapors will cause inflammation of the nose, throat, trachea, bronchial passages and lung tissue. In the most severe cases, chest congestion and painful breathing may occur.
Systemic Effects:	Both liquid on the skin and inhaled vapor are absorbed and may result in systemic poisoning which causes loss of blood through the capillaries and can lead to shock or death.

TOXICITY. Highly toxic in any physical state.

Eye Effect: (vapor)	ICT_{50}	About 200 mg–min/m^3
Inhalation: (vapor)	LCT_{50}	1500 mg–min/m^3
Skin Effect: (vapor)	LCT_{50} ICT_{50}	above 10,000 mg–min/m^3 1500–2000 mg–min/m^3

AGENT. Mustard–Lewisite Mixture (HL) Continued

DETOXIFICATION. HL is not detoxified in the body.

VARIANTS. The proportions of HD and L in the mixture may be varied based on expected weather conditions. The figures given on this data sheet are for 63 percent L and 37 percent HD by weight, which gives the lowest freezing point. Mixtures with a greater proportion of HD could be used for warmer temperatures.

INTERACTION WITH SHIPBOARD MATERIALS. Little or none if dry.

INTERACTION WITH PROTECTIVE CLOTHING AND EQUIPMENT. The protective mask and permeable protective clothing are required to protect against HL vapor and small droplets. Impermeable clothing is needed for protection from large droplets, splashes and smears.

DECONTAMINATION. Immediate decontamination of the smallest drop liquid agent on the skin is essential. The the M291 Skin Decontamination Kit can be used for this purpose. The primary decontamination method for ship structure and equipment is oxidation by bleaches, such as calcium hypochlorite (HTH).

FLAMMABILITY. The flash point is high enough not to interfere with military use of the agent.

SUMMARY: HL is a mixture of Distilled Mustard (HD) and Lewisite (L) which provides mixture with a low freezing point for the use in cold weather. While it is less volatile than L and more so than HD, its flash point is higher than L and it is not ignited by large explosive charges.

CHEMICAL AGENT DATA SHEET

AGENT. Phosgene Oxime (CX)

AGENT CATEGORY.

Physiological effects:	Blister agent
Military use:	Casualty agent
Duration of hazard:	Persistent
Route of entry:	Percutaneous
Onset of effects:	Quick acting

PHYSICAL STATE. CX is a white, crystalline powder, it melts at about 100˚F and boils at 130˚F. Solid CX decomposes slowly at normal temperatures. By addition of certain compounds, it is possible to liquify it at room temperature. This might be done to stabilize it for use as a chemical agent.

DETECTION AND IDENTIFICATION.

Sensory Detection and Identification:	CX has a disagreeable, penetrating odor.
Liquid Detection and Identification:	None.
Vapor Detection and Identification:	M256A1 detects and identifies specifically.

PHYSIOLOGICAL SYMPTOMS.

Eyes:	Immediate pain and inflammation. Can lead to permanent lesions of the cornea resulting in blindness.
Skin:	Immediate pain, reddening within 30 minutes. Skin becomes blanched in 30 seconds at the point of contact and is surrounded by a ring. It produces a weal (similar to a bee sting) in about 30 minutes. The blanched area turns brown in about 24 hours, with a scab forming in a week which generally falls off in about three weeks. Recovery takes 1 to 3 months.
Respiratory Tract:	It causes violent irritation of the mucous membranes of the nose. Irritation of the respiratory tract can lead to fluid in the lungs.

TOXICITY.

Inhalation:	ICT_{50}	3 mg–min/m^3.
(vapor)	LCT_{50}	3200 mg–min/m^3.
Percutaneous	ICT_{50}	20 mg–min/m^3

DETOXIFICATION. CX is not detoxified in the body.

VARIANTS. Because of the extreme instability of CX, it may be mixed with stabilizers for use as a chemical agent.

INTERACTION WITH SHIPBOARD MATERIALS. None known.

INTERACTION WITH PROTECTIVE CLOTHING AND EQUIPMENT. Protective mask and protective clothing are required.

AGENT. Phosgene Oxime (CX) Continued

DECONTAMINATION. Decontamination of the skin is not totally effective once pain has been experienced but the skin should be flushed with large amounts of water to remove any CX that has not reacted with the skin. Contaminated surfaces and equipment can be decontaminated with water.

FLAMMABILITY. No information available.

SUMMARY: Very few products are so painful and so destructive to the tissues. However, the instability of CX is a disadvantage in its use as a chemical agent. It is unlikely to be encountered in its pure form.

CHEMICAL AGENT DATA SHEET

AGENT. Hydrogen Cyanide (AC)

AGENT CATEGORY.

Physiological effects:	Blood agent
Military use:	Casualty agent
Duration of hazard:	Nonpersistent
Route of entry:	Eye–respiratory
Onset of effects:	Quick acting

PHYSICAL STATE. AC is disseminated as a colorless liquid but its boiling point is so low, only 78˚ F, and its volatility so high that it vaporizes quickly. Its vapors are slightly lighter than air, so it dissipates readily in the atmosphere.

DETECTION AND IDENTIFICATION.

Sensory Detection and Identification:	AC has an odor like bitter almond oil. It can be detected by smell at concentrations as low as 1–2 mg/m^3. However,it quickly overwhelms the sense of smell and the ability to sense its presence is lost. Many individuals cannot smell it at all.
Liquid Detection and Identification:	None.
Vapor Detection and Identification:	M256A1 detects and identifies as a blood agent.

PHYSIOLOGICAL SYMPTOMS. The maximum tolerable concentration for an agent is defined as the vapor concentration below which the body can detoxify the agent as rapidly as it enters the body. For AC, this concentration is 22 mg/m^3.

Low dose:	Exposure that does not exceed the maximum tolerable concentration may cause no symptoms or, possibly, rapid breathing.
Moderate dose:	Intoxication in two phases. The first is an active phase in which the victim experiences convulsions, rapid deep breathing and a slow pulse rate. This is followed by a passive phase caused by lack of oxygen. Shallow breathing is followed by occasional cessation of breathing.
Lethal dose:	Death due to cardiac arrest. Concentrations as high as 10,000 mg/m^3 can cause death within 15 seconds.

Casualties who have not been exposed to a lethal dose recover spontaneously after the agent cloud has passed.

TOXICITY. AC is highly toxic in the liquid form, but it evaporates so quickly, it is classified as an inhalation hazard. The only time a percutaneous hazard exists is immediately after a direct hit or a near miss. AC's toxicity as a vapor must be measured on a sliding scale because it is rapidly detoxifed by the body. As the concentration falls, the amount of time required increases more than proportionately to achieve the same effect. The times in parenthesis below indicate the period over which the corresponding concentration would have to be maintained.

AGENT. Hydrogen Cyanide (AC) Continued

Inhalation: (vapor)	ICT_{50} LCT_{50}	Varies widely with concentration. 660 mg–min/m^3 at 2640 mg/min^3 (15 seconds) 1000 mg–min/m^3 at 1000 mg/min^3 (1 minute) 2000 mg–min/m^3 at 200 mg/min^3 (10 minutes) 4500 mg–min/m^3 at 150 mg/m^3 (30 minutes)
Eye Effect: (liquid)	LD_{50}	1–2 mg/kg
Oral Dose:	LD_{50}	0.9 mg/kg
Skin Effect: (liquid)	LD_{50}	100 mg/kg

DETOXIFICATION. The body detoxifies AC rapidly. The rate is 0.017 mg/kg/min.

VARIANTS. None.

INTERACTION WITH SHIPBOARD MATERIALS. Little or none.

PROTECTIVE CLOTHING AND EQUIPMENT. A protective mask is needed. Protective clothing is needed topside during the attack but not afterwards. Liquid AC splashed on clothing evaporates more slowly, making it more dangerous. AC is poorly adsorbed by charcoal filters, especially if they are damp.

DECONTAMINATION. Not required.

FLAMMABILITY. The flash point of AC is only 32˚ F. It ignites about half the time when delivered with artillery shells.

SUMMARY. AC is a quick acting, nonpersistent agent. Liquid AC is a percutaneous threat in an immediate area release but it is so highly volatile that it does not present a contamination problem. AC vapor is not a percutaneous hazard. There are two significant limitations on the military use of AC First, it is difficult to maintain a high enough concentration on the target for a long enough time to produce the intended effect. The second is its flammability. Bursting munitions would likely be necessary to achieve the required concentration on target but they can also cause the agent to burn.

CHEMICAL AGENT DATA SHEET

AGENT. Cyanogen Chloride (CK)

AGENT CATEGORY.

Physiological effects:	Blood agent
Military use:	Casualty agent
Duration of hazard:	Nonpersistent
Route of entry:	Eye–respiratory
Onset of effects:	Quick acting

PHYSICAL STATE. CK is normally encountered as a vapor because it boils at about 55˚F and is quite volatile. CK vapor is only 2.1 times heavier than air, so it dissipates faster than most other chemical agents.

DETECTION AND IDENTIFICATION.

Sensory Detection and Identification:	CK is a colorless gas with an odor like bitter almonds. Its irritating and lacrimatory properties are so great that the odor can go unnoticed. The median concentration detectable by lacrimatory effects is 12 mg/m^3.
Liquid Detection and Identification:	None.
Vapor Detection and Identification:	M256A1 detects and identifies as a blood agent.

PHYSIOLOGICAL SYMPTOMS. CK interferes with utilization of oxygen by the body in a manner like AC. However, it has additional effects.

Respiratory Tract:	CK irritates the mucous membranes and has a choking effect and a strong irritating effect that cause slow breathing. It can cause fluid to accumulate in the lungs faster than phosgene (CG), possibly resulting in dryland drowning.
Eyes:	Irritation.
Skin:	Irritating.

TOXICITY.

Eye Effect:		Can cause lacrimation but toxicity to eye is low. (vapor)
Inhalation: (vapor)	ICT_{50} LCT_{50}	7000 mg–min/m^3 11,000 mg–min/m^3
Skin Effect: (vapor)		Can cause irritation but toxicity to skin is low.

DETOXIFICATION. The body rapidly detoxifies CK at a rate of .02 to .1 mg/kg/min.

VARIANTS. None.

INTERACTION WITH SHIPBOARD MATERIALS. None if CK is dry

AGENT. Cyanogen Chloride (CK) Continued

PROTECTIVE CLOTHING AND EQUIPMENT. Protective mask required. A very high concentration may overpower the filter and break down its protective ability.

DECONTAMINATION. None required

FLAMMABILITY. CK has no flash point.

SUMMARY: CK stimulates the flow of tears at very low concentrations and provides sufficient warning to don masks.

CHEMICAL AGENT DATA SHEET

AGENT. Arsine (SA)

AGENT CATEGORY.

Physiological effects:	Blood agent
Military use:	Casualty agent
Duration of hazard:	Nonpersistent
Route of entry:	Eye–respiratory
Onset of effects:	Delayed acting

PHYSICAL STATE. SA is normally disseminated as a vapor. The boiling point of –80.5˚F and high volatility mean that SA is difficult to liquify and store. SA vapor is only 2.7 Times heavier than air, so it dissipates faster than most other chemical agents.

DETECTION AND IDENTIFICATION.

Sensory Detection and Identification:	SA is a colorless gas with a mild garlic odor.
Liquid Detection and Identification:	None.
Vapor Detection and Identification:	None.

PHYSIOLOGICAL SYMPTOMS. Slight exposure to SA causes chills, nausea, and vomiting. Severe exposure damages blood, causing anemia. Effects may be delayed from two hours to as long as 11 days. It is the only blood agent that is not quick acting.

TOXICITY. SA is not toxic to the skin or eyes.

Inhalation:	ICT_{50}	ICT_{50} 2,500 mg–min/m^3
(vapor)	LCT_{50}	LCT_{50} 5,000 mg–min/m^3

DETOXIFICATION. The detoxification rate of SA in the body is not rapid enough to be of importance.

VARIANTS. None.

INTERACTION WITH SHIPBOARD MATERIALS. SA reacts slowly with copper, brass and nickel. It may also be decomposed by contact with other metals.

PROTECTIVE CLOTHING AND EQUIPMENT. Protective mask required.

DECONTAMINATION. None required

FLAMMABILITY. SA ignites so easily that it cannot be used in shells. It may explode spontaneously when mixed with air.

SUMMARY: Arsine has some significant disadvantages as a chemical agent. SA is by far the most volatile and rapidly dispersed tactical chemical agent but its mild garlic–like odor will provide early warning to don masks. It is difficult to fill and store munitions with SA.

CHEMICAL AGENT DATA SHEET

AGENT. Phosgene (CG)

AGENT CATEGORY.

Physiological effects:	Choking agent
Military use:	Casualty agent
Duration of hazard:	Nonpersistent
Route of entry:	Eye–respiratory
Onset of effects:	Delayed Acting

PHYSICAL STATE. It is unlikely that phosgene would ever be encountered in battle in anything other than the gaseous state. It is highly volatile and its boiling point is only 46˚ F. Refrigeration is needed to fill munitions with liquid phosgene. Its vapors are 3.4 times heavier than air and may settle in low or poorly ventilated spaces.

DETECTION AND IDENTIFICATION.

Sensory Detection and Identification:	Phosgene has an odor like green corn, newly mown hay or fresh grass cuttings. However, it can irritate the eyes and upper respiratory tract at concentrations below the threshold at which it can be smelled.
Liquid Detection and Identification:	None.
Vapor Detection and Identification:	CG Draeger tube from Gas Free Engineering equipment.

PHYSIOLOGICAL SYMPTOMS.

Initial Symptoms:	The initial symptoms of exposure to phosgene may be mild irritation of the eyes, nose and throat. However, these symptoms, if they occur, disappear shortly after cessation of exposure and they provide no basis for a prognosis. Phosgene does not trigger the reflexes that protect the respiratory tract against noxious or irritating gases like chlorine does.
Delayed Effects:	The primary effects – bronchial congestion, chest tightness, chest pain and coughing up mucous or phloegm – may not occur for as much as six hours after exposure to low concentrations. Higher concentrations may speed the onset of these symptoms but the full effect is usually not apparent until three to four hours after exposure. As congestion develops, the throat can be observed collapsing inward as the victim sucks in air.
Lethal Dose:	If the victim has received a lethal dose, death results from oxygen deficiency or dryland drowning due to fluid in the lungs, usually within 24 hours.

TOXICITY.

Eye and Upper Respiratory Effect (vapor):	ICT_{50}	12.5 mg–min/m^3
Inhalation: (vapor)	ICT_{50} LCT_{50}	1600 mg–min/m^3 3200 mg–min/m^3

AGENT. Phosgene (CG) Continued

DETOXIFICATION. Phosgene is not detoxified in the body. The effects are cumulative. However, if the victim survives the first 24 to 48 hours after exposure, the body can repair the damage to the lungs and the victim can recover with proper care.

VARIANTS. CG is closely related to Diphosgene (DP), which converts to CG in storage and in the body.

INTERACTION WITH SHIPBOARD MATERIALS. CG is corrosive to metals under moist conditions.

PROTECTIVE CLOTHING AND EQUIPMENT. Protective mask required.

DECONTAMINATION. Aeration of confined spaces.

FLAMMABILITY. Not flammable.

SUMMARY. CG's persistency is very short, usually minutes except for areas of poor ventilation. It is rapidly hydrolyzed, so rain and fog destroy its effectiveness. The absence of definitive early symptoms makes it useful for surprise attack.

CHEMICAL AGENT DATA SHEET

AGENT. Diphosgene (DP)

AGENT CATEGORY.

Physiological effects:	Choking agent
Military use:	Casualty agent
Duration of hazard:	Nonpersistent
Route of entry:	Eye–respiratory
Onset of effects:	Quick–acting lacrimatory effects Delayed lung effects

PHYSICAL STATE. The boiling point of diphosgene is about 261˚F. It is volatile but not nearly as much as phosgene, to which it is closely related. Its vapors are 6.8 times heavier than air and will settle in low and poorly ventilated spaces.

DETECTION AND IDENTIFICATION.

Sensory Detection and Identification:	Diphosgene has an odor like green corn, newly mown hay or fresh grass cuttings.
Liquid Detection and Identification:	None.
Vapor Detection and Identification:	None.

PHYSIOLOGICAL SYMPTOMS.

Initial Symptoms:	The initial symptom of exposure to diphosgene is tears.
Delayed Effects:	The body converts diphosgene to phosgene (CG) and the delayed symptoms are the same as those of phosgene. The primary effects, bronchial congestion, chest tightness, chest pain and coughing up mucous or phloegm, may not occur for as much as six hours after exposure to low concentrations. Higher concentrations may speed the onset of these symptoms but the full effect is usually not apparent until three to four hours after exposure. As congestion develops, the throat can be observed collapsing inward as the victim sucks in air.
Lethal Dose:	If the victim has received a lethal dose, death results from oxygen deficiency or dryland drowning due to fluid in the lungs, usually within 24 hours.

TOXICITY.

Inhalation: (vapor)	ICT_{50} LCT_{50}	1600 mg–min/m^3 for resting men 3200 mg–min/m^3 for resting men

DETOXIFICATION. Diphosgene is not detoxified. The effects are cumulative. However, if the victim survives the first 24 to 48 hours after exposure, the body can repair the damage to the lungs and the victim can recover with proper care.

VARIANTS. None.

INTERACTION WITH SHIPBOARD MATERIALS. Metals act as catalysts in the conversion of DP to CG. CG is corrosive to metals under moist conditions.

AGENT. Diphosgene (DP) Continued

PROTECTIVE CLOTHING AND EQUIPMENT. Protective mask required.

DECONTAMINATION. Aeration of confined spaces.

FLAMMABILITY. Not flammable.

SUMMARY. Compared to CG, DP's lacrimatory (tear producing) effects and lower volatility make it less effective for surprise attack. DP is unstable in storage because it converts to CG. These properties are liabilities with respect to its use as a chemical agent but it cannot be completely discounted as a threat.

CHEMICAL AGENT DATA SHEET

AGENT. BZ

AGENT CATEGORY.

Physiological effects:	Central Nervous System Depressant
Military use:	Casualty agent
Duration of hazard:	Nonpersistent
Route of entry:	Eye–respiratory
Onset of effects:	Quick–acting lacrimatory effects Delayed lung effects

PHYSICAL STATE. The melting point of this agent is about 330˚F; therefore, it will normally be found as a solid and is disseminated as a dusty aerosol.

DETECTION AND IDENTIFICATION.

Sensory Detection and Identification:	None.
Liquid Detection and Identification:	None.
Vapor Detection and Identification:	None.

PHYSIOLOGICAL SYMPTOMS. A delay in the onset of symptoms of several hours is typical.

General:	Dry, flushed skin, fast heartbeat, slowing of mental and physical activity, headache, giddiness, disorientation, urinary retention and hallucinations.
Psychological:	Primary effects is psychological; sleepiness, decreased alertness, short attention span, loss of difficulty in comprehension and solving problems. High doses produce toxic delirium which completely destroys the ability to perform any military task.

TOXICITY. Although BZ can be absorbed through the skin, this is a much less effective rout than the respiratory tract.

Inhalation: (vapor)	 ICT_{50} LCT_{50}	Delayed onset of effects can be caused by 2 mg/m^3 112 mg–min/m^3 200,000 mg–min/m^3 (est)

DETOXIFICATION. Recovery in 36 to 48 hours.

VARIANTS. Can be mixed with alcohol or Dimethyl Sulfoxide (DMSO) to permit absorption through the skin. If BZ is absorbed through the skin

INTERACTION WITH SHIPBOARD MATERIALS. None.

INTERACTION WITH PROTECTIVE CLOTHING AND EQUIPMENT. A protective mask is required. Protective clothing is required if BZ is disseminated in solution in a liquid.

AGENT. BZ Continued.

DECONTAMINATION. Wash with soap and water. M291 kit can be used to clean skin if washing is impossible.

FLAMMABILITY. Flash point is 475˚F.

SUMMARY: BZ is a slow acting agent which temporarily incapacitates unprotected personnel. It enters the body by inhalation of the aerosol and interferes with mental processes that control bodily functions. Normally, complete recovery occurs.

RIOT CONTROL COMPOUND DATA SHEET

AGENT. Adamsite (DM)

AGENT CATEGORY.

Physiological effects:	Vomiting agent
Military use:	Riot control
Duration of hazard:	Nonpersistent
Route of entry:	Eye–respiratory
Onset of effects:	Quick acting

PHYSICAL STATE. DM is disseminated as a solid aerosol that forms very little vapor.

DETECTION AND IDENTIFICATION. No capability.

PHYSIOLOGICAL SYMPTOMS.

Sequence:	The following symptoms appear in progressive order. Irritation of the eyes and mucous membranes, viscous discharge from the nose, sneezing and coughing, severe headaches, acute pain and tightness in the chest, nausea, and vomiting.
Severity:	Respiratory tract irritation is the primary symptom. Sneezing is violent and uncontrollable. Eye effect is secondary.

TOXICITY. DM is irritating but toxicity is low. When solid DM is covered with water, a protective oxide coating is formed hindering further hydrolysis. The oxide is very poisonous if taken internally.

Inhalation:	ICT_{50}	22 mg–min/m^3 for one minute exposure
(vapor)	LCT_{50}	Average 11,000 mg–min/m^3

DETOXIFICATION. DM is detoxified rapidly in small amounts. At incapacitating concentrations the effects last about 30 minutes. At high concentrations, the effects may last up to three hours.

VARIANTS. None.

INTERACTION WITH SHIPBOARD MATERIALS. Slight when dry.

PROTECTIVE CLOTHING AND EQUIPMENT. A protective mask is required.

DECONTAMINATION. None required in the open. Use a calcium hypochlorite solution on large concentrations in enclosed spaces.

FLAMMABILITY. None under normal conditions.

SUMMARY: This vomiting compound is normally a solid. It is heated for dispersal, vaporizes and then condenses to form a solid aerosol. DM is classified as a quick acting agent but its effects develop more slowly than those of DA.

RIOT CONTROL COMPOUND DATA SHEET

AGENT. O–chlorobenzlmalononitrile (CS)

AGENT CATEGORY.

Physiological effects:	Tear agent
Military use:	Riot control
Duration of effectiveness:	Nonpersistent
Route of entry:	Eye–respiratory
Onset of effects:	Quick acting

PHYSICAL STATE. CS is normally dispersed as a solid aerosol.

DETECTION AND IDENTIFICATION.

Sensory Detection.	CS has an odor like pepper. It is a colorless solid at 68˚F.

PHYSIOLOGICAL SYMPTOMS. The onset of maximum effects is 20 to 60 seconds after the initial exposure. The victim is incapable of effective, concerted action while suffering from these effects.

Eyes:	Extreme burning and copious tears immediately on contact; causes eyelids to close, even at low concentrations.
Respiratory tract:	Nose and throat irritation, difficulty in breathing, tightness in the chest, runny nose.
Skin:	CS can cause a stinging sensation on moist skin. Prolonged exposure causes burns that can result in blisters and skin lesions.
Other symptoms:	Nausea, vomiting and dizziness.

TOXICITY. CS is highly irritating but its toxicity is low. maximum effects occur within 10–20 seconds after exposure. The eyes are affected by concentrations as low as 1–5 mg/m^3. The effects on the respiratory tract appear after inhalation of concentrations as low as 12–20 mg/m^3.

Inhalation:	ICT_{50}	10–20 mg–min/m^3
(vapor)	LCT_{50}	61,000 mg–min/m^3

DETOXIFICATION. The effects last five to ten minutes after the victim is removed to fresh air.

VARIANTS. CS exists in three forms, CS, CS1 and CS2. CS1 and CS2 contain additives that enhance the agent's performance as an aerosol by reducing particle size. CS1 and CS2 are persistent agents.

INTERACTION WITH SHIPBOARD MATERIALS. None.

PROTECTIVE CLOTHING AND EQUIPMENT. The protective mask battle dress provide adequate protection.

DECONTAMINATION. Aeration is normally sufficient for CX. Personnel who are still experiencing discomfort after 10 minutes of aeration should flush affected parts of the body with cool water for three to five minutes before showering with warm or hot water. Equipment contamination with visible CS particles or a variant of CS can be removed by physical means (scrubbing) with soap and water. The soap should be highly alkaline but do not use calcium hypochlorite solutions or detergents that contain chlorine bleach. These materials can react with CS to produce toxic compounds.

AGENT. O–chlorobenzlmalononitrile (CS) Continued

FLAMMABILITY. Flash point is 386.6˚F. Since dispersal is normally accomplished by grenade, flammability is not a factor.

SUMMARY: CS is effective in extremely low concentrations. CS that is inhaled before masking gives the impression that the mask is leaking.

RIOT CONTROL COMPOUND DATA SHEET

AGENT. Diphenylchloroarsine (DA)

AGENT CATEGORY.

Physiological effects:	Vomiting agent
Military use:	Riot control
Duration of effectiveness:	Nonpersistent
Route of entry:	Eye–respiratory
Onset of effects:	Quick acting

PHYSICAL STATE. DA is disseminated as a solid aerosol. Although it melts at 106–112°F, its volatility is so low that very little vapor develops from either the solid or liquid state.

DETECTION AND IDENTIFICATION. No capability.

PHYSIOLOGICAL SYMPTOMS.

Sequence:	The following symptoms appear in progressive order. Irritation of the eyes and mucous membranes, viscous discharge from the nose, sneezing and coughing, severe headaches, acute pain and tightness in the chest, nausea, and vomiting. Skin irritation may accompany these symptoms.
Severity:	Respiratory tract irritation is the primary symptom. Sneezing is violent and uncontrollable. Skin and eye effects are secondary.

TOXICITY.

Inhalation:	ICT_{50}	12 mg–min/m^3 for an exposure of 10 minutes or more
(vapor)	LCT_{50}	15,000 mg–min/m^3 (estimated)

DETOXIFICATION. One to two hours for an incapacitating amount.

VARIANTS. None.

INTERACTION WITH SHIPBOARD MATERIALS. May react with metals if wet.

PROTECTIVE CLOTHING AND EQUIPMENT. Protective mask.

DECONTAMINATION. None required.

FLAMMABILITY. The flash point is high enough that it does not affect its use.

SUMMARY: Quick acting vomiting agents like DA could be used to cause personnel to vomit and remove their protective masks, thus exposing them to more serious hazards.

RIOT CONTROL COMPOUND DATA SHEET

AGENT. Chloropicrin (PS)

AGENT CATEGORY.

Physiological effects:	Tear agent
Military use:	Riot control
Duration of effectiveness:	Nonpersistent
Route of entry:	Eye–respiratory
Onset of effects:	Quick acting

PHYSICAL STATE. PS is stored as a liquid that can be used in any climate, even extreme conditions. It evaporates readily. Its vapor is 6.5 times heavier than air , so it will settle in low and poorly ventilated spaces.

DETECTION AND IDENTIFICATION.

Sensory Detection:	PS, normally encountered as a vapor, has a pungent odor.

PHYSIOLOGICAL SYMPTOMS.

Eyes:	Burning and tears immediately on contact, causes eyelids to close, even at low concentrations.
Respiratory tract:	Nose and throat irritation; high concentrations cause fluid in lungs.
Skin:	Liquid PS causes burns that can result in blisters and skin lesions.
Other symptoms:	Vomiting.

TOXICITY. The toxicity of PS is high for a riot control compound.

Inhalation:		Irritation results from an exposure of 10 minutes or more to 9 mg–min/m^3 (vapor)
	LCT_{50}	2000 mg–min/m^3

DETOXIFICATION. Rate of detoxification is low.

VARIANTS. Often mixed with choking agents.

INTERACTION WITH SHIPBOARD MATERIALS. May react with metals in wet conditions.

PROTECTIVE CLOTHING AND EQUIPMENT. Protective mask; protective clothing needed for protection against liquid PS.

DECONTAMINATION. Water or weak bleach solutions.

FLAMMABILITY. Not flammable but decomposes into toxic substances near an open flame.

SUMMARY: PS is effective in extremely low concentrations. PS that is inhaled before masking gives the impression that the mask is leaking or it can cause personnel to vomit and remove their protective masks, thus exposing them to more serious hazards. PS itself is toxic and it can be mixed with other toxic agents.

APPENDIX E.
HAND–HELD CHEMICAL AGENT SIMULANT TRAINING DISPERSER GUIDELINES FOR USE

470–E.1 PURPOSE

a. The hand-held chemical defense simulant training disperser is provided to assist in chemical agent detection and decontamination training. The disperser provides realistic application and distribution, and the simulant allows accurate detection with M8/M9 detection paper. Use of the disperser and simulant is restricted to dedicated chemical defense training in open ocean (outside the 12–mile limit).

470–E.2 SAFETY PRECAUTIONS

a. Disperser: Vendor's brochure accompanying disperser provides important guidelines for operation of the disperser. Operation involves liquid under pressure and precautions must be followed to prevent injury.

b. Simulant: The simulant provided for training is a combination of Polyethylene Glycol 200 (PEG 200) and methyl salicylate (oil of wintergreen). Both of these compounds have been approved for use as simulants by BUMEDINST 3403.1 subject to the use of proper protective equipment and to specific application restrictions.

c. All individuals participating in the training or who will be exposed to simulant spray must wear an MCU–2/P series protective mask. If the training canister allows a wintergreen odor to penetrate, it should be replaced. Excessive exposure to methyl salicylate may cause lung irritation.

WARNING

DO NOT TAKE SIMULANT INTERNALLY

d. Methyl salicylate (MS) is a mild eye irritant. Wash any exposed skin with soap and water. If eyes are exposed, flush with water for five minutes. The MS may cause skin irritation in a very small percentage of the population (some individuals may be sensitive to it after prolonged or repeated exposure). While MS is found in many foods, large doses (greater than 15 ml) can be toxic. (The PEG component has no adverse health impact.)

e. Material Safety Data Sheets are provided for both components of the simulant. A copy of the Material Safety Data Sheets should be supplied to the Damage Control Assistant (DCA), the Supply Officer and the Medical Officer. To dispose of excess simulant, contact the Type Commander for redistribution directions. Detection paper used in the training evolutions (and clothing, if not re-used) should be disposed of as ordinary trash.

470–E.3 STOWAGE

a. Both the disperser and simulant are to be provided with locked stowage, in a well-ventilated compartment below 95°F, under the control of the Damage Control Assistant. The disperser and simulant container caps or closures must be tightly secured to prevent vapor from escaping. The simulant has an indefinite shelf life. Unused portions of simulant can be stored in the disperser; it is not necessary to empty and clean the disperser after each use. All outer surfaces, however, should be washed with water before stowage to remove simulant.

470–E.4 USE

NOTE

Gloves and MCU–2/P series protective mask should be worn when handling simulant, such as filling the disperser, to prevent excessive skin contact and exposure to vapors.

a. Simulant shall only be used aboard ships outside the 12–mile limit. Residue is washed into the ocean where it degrades naturally. Simulant shall not be sprayed in coastal areas or at shore-based training facilities.

b. Training with simulant should be performed only in direct weather areas without excessive traffic. Filling of the disperser and application of simulant to surface areas is also to be done only in external areas. The area should be easy to wash down to allow easy removal (decontamination) of the simulant. Personnel conducting the training should be able to monitor the entire area, to ensure that all safety precautions are being followed and that no simulant is tracked inside. Personnel exposed to simulant shall not reenter the ship until exposed clothing has been removed and boots scrubbed clean to prevent simulant from being tracked into interior spaces.

c. Following instructions in vendor's manual, fill disperser tank with the desired amount of simulant (a normal drill will require about one pint) and pressurize. A minimum of about 25 pumps is required to adequately pressurize the disperser. With the nozzle held three to four feet from the object or surface, spray the desired area using a quick sweeping motion. Sweep lanes should be between two and three feet apart. Adjust speed of sweep to reach the desired surface density of one to ten grams (1–10 g/m^2) per square meter; use Figure 470–C–1 (from **NSTM Chapter 470,** Appendix C, the Chemical Hazard Assessment Guide, or C–HAG) to estimate density. Simulant can be applied to decks, equipment, exterior bulkheads, and personnel wearing MOPP 4 gear. Additional guidance to consider:

1. The simulant is to be used at full strength; do not dilute.

2. Application in a high wind may require spraying in the direction of the wind, and possibly more simulant, to reach the desired concentration.

3. Simulant should be applied just prior to the training exercise.

4. Apply simulant to dry areas only, as simulant will not stay on wet surfaces. Avoid use in rain and sea spray areas.

5. The size of the area sprayed should be restricted for ease of cleaning.

d. Simulant liquid can be detected by using the M8 or M9 Chemical Agent Detection Paper. Procedures for use are found in **NSTM Chapter 470,** Section 4**.**

e. For training in decontamination procedures, follow guidelines in **NSTM Chapter 470,** Section 7, for removal of simulant from equipment and surfaces, with the exception that use of calcium hypochlorite is not necessary. Simulant can be carried away by water; use of detergent will assist in simulant removal by reducing its adhesive characteristics. Following decontamination, monitor with M8/M9 paper to determine if all simulant is removed. Only following complete clean-up should protective mask be removed.

f. For training in personnel decon, set up a Contamination Control Area (CCA) in accordance with the procedure in **NSTM Chapter 470,** Section 7, preferably outside the skin of the ship. The CCA area should not be sprayed with simulant. Gross decontamination of gloves, masks and boots should be performed before entering the CCA. Process personnel exposed to simulant through the CCA using the **NSTM Chapter 470** procedures. To check effectiveness of doffing procedures, when outer protective clothing has been removed, quickly move that person to an area free of simulant and simulant vapors and monitor that person for contamination on his or her inner clothing or skin. A wintergreen odor is an indication of unsatisfactory doffing procedures.

g. After the exercise, all sprayed overgarments should be laundered separately from other clothing to remove any remaining simulant. The cut sections of the laundered overgarments can then be repaired with duct tape (or other means available) so that they may be re-used for training; **NSTM Chapter 470** describes the fabrication of training suits using hook and pile fasteners (e.g., Velcro). All sprayed boots, gloves and masks should be washed in slightly soapy fresh water, rinsed with fresh water, and air dried before stowing.

470–E.5 REPORTING

a. Any problems with the hand-held chemical defense training simulant disperser should be reported to Carderock Division, Naval Surface Warfare Center, Code 6253, Naval Base, Philadelphia, PA 19112–5083.

In the event that personnel exposure to the simulant is suspected of causing a negative reaction, contact the ship's Medical Department representative.

470–E.6 REFERENCES

a. **Naval Ships' Technical Manual Chapter 470**

b. H.D. Hudson Manufacturing Co. **Operating Instructions for Sprayer, Compression, Insecticide, Manually–Carried and Operated, One-Gallon Capacity, No. 67132MS,** NSN 3740–00–181–3677 (instructions provided with disperser)

c. BUMEDINST 3401.1, **Use of Chemical Warfare (CW) Simulants and Riot Control Agents (RCA) in Chemical Defense Training,** dtd. 29 Sep 81.

(Insert Classification of TMDER Here) CLASSIFICATION:

NAVSEA/SPAWAR TECHNICAL MANUAL DEFICIENCY/EVALUATION REPORT (TMDER)
(NAVSEA S0005–AA–GYD–030/TMMP & NAVSEAINST 4160.3A)

INSTRUCTIONS: Continue on 8 1/2” x 11” paper if space is needed.

1. USE THIS REPORT TO INDICATE DEFICIENCIES, PROBLEMS, AND RECOMMENDATIONS RELATING TO PUBLICATION.
2. FOR UNCLASSIFIED TMDERS, FILL IN YOUR RETURN ADDRESS IN SPACE PROVIDED ON THE BACK, FOLD AND TAPE WHERE INDICATED, AND MAIL. (SEE OPNAVINST 5510H FOR MAILING CLASSIFIED TMDERS.)

1. **PUB NO.**	2. **VOL PART**	3. **REV. NO./DATE OR TM CH. NO./DATE**	4. **SYSTEM/EQUIPMENT IDENTIFICATION**
S9086-QH-STM-010/ CH-470R3		Rev 3	

5. TITLE	6. **REPORT CONTROL NUMBER**
NSTM Chapter 470, Shipboard BW/CW Defense and Countermeasures	

7. **RECOMMENDED CHANGES TO PUBLICATION**

PAGE NO. A.	**PARAGRAPH B.**	**C. RECOMMENDED CHANGES AND REASONS**

8. ORIGINATOR’S NAME AND WORK CENTER (Please Print)	**9. DATE SIGNED**	**10. DSN/COMM NO.**	**11. TRANSMITTED TO**

12. SHIP HULL NO. AND/OR STATION ADDRESS (DO NOT ABBREVIATE)

FOLD HERE

DEPARTMENT OF THE NAVY

PLACE
POSTAGE
HERE

Official Business

COMMANDER
PORT HUENEME DIVISION CODE 5B00
NAVAL SURFACE WARFARE CENTER
4363 MISSILE WAY
PORT HUENEME, CA 93043–4307

FOLD HERE

(Insert Classification of TMDER Here) CLASSIFICATION:

NAVSEA/SPAWAR TECHNICAL MANUAL DEFICIENCY/EVALUATION REPORT (TMDER)
(NAVSEA S0005–AA–GYD–030/TMMP & NAVSEAINST 4160.3A)

INSTRUCTIONS: Continue on 8 1/2” x 11” paper if space is needed.

1. USE THIS REPORT TO INDICATE DEFICIENCIES, PROBLEMS, AND RECOMMENDATIONS RELATING TO PUBLICATION.
2. FOR UNCLASSIFIED TMDERS, FILL IN YOUR RETURN ADDRESS IN SPACE PROVIDED ON THE BACK, FOLD AND TAPE WHERE INDICATED, AND MAIL. (SEE OPNAVINST 5510H FOR MAILING CLASSIFIED TMDERS.)

1. **PUB NO.**	2. **VOL PART**	3. **REV. NO./DATE OR TM CH. NO./DATE**	4. **SYSTEM/EQUIPMENT IDENTIFICATION**
S9086-QH-STM-010/ CH-470R3		Rev 3	

5. TITLE	6. **REPORT CONTROL NUMBER**
NSTM Chapter 470, Shipboard BW/CW Defense and Countermeasures	

7. **RECOMMENDED CHANGES TO PUBLICATION**

PAGE NO. A.	**PARAGRAPH B.**	**C. RECOMMENDED CHANGES AND REASONS**

8. ORIGINATOR’S NAME AND WORK CENTER (Please Print)	**9. DATE SIGNED**	**10. DSN/COMM NO.**	**11. TRANSMITTED TO**

12. SHIP HULL NO. AND/OR STATION ADDRESS (DO NOT ABBREVIATE)

FOLD HERE

DEPARTMENT OF THE NAVY

PLACE
POSTAGE
HERE

Official Business

COMMANDER
PORT HUENEME DIVISION CODE 5B00
NAVAL SURFACE WARFARE CENTER
4363 MISSILE WAY
PORT HUENEME, CA 93043–4307

FOLD HERE

(Insert Classification of TMDER Here) CLASSIFICATION:

NAVSEA/SPAWAR TECHNICAL MANUAL DEFICIENCY/EVALUATION REPORT (TMDER)
(NAVSEA S0005–AA–GYD–030/TMMP & NAVSEAINST 4160.3A)

INSTRUCTIONS: Continue on 8 1/2” x 11” paper if space is needed.

1. USE THIS REPORT TO INDICATE DEFICIENCIES, PROBLEMS, AND RECOMMENDATIONS RELATING TO PUBLICATION.
2. FOR UNCLASSIFIED TMDERS, FILL IN YOUR RETURN ADDRESS IN SPACE PROVIDED ON THE BACK, FOLD AND TAPE WHERE INDICATED, AND MAIL. (SEE OPNAVINST 5510H FOR MAILING CLASSIFIED TMDERS.)

1. **PUB NO.**	2. **VOL PART**	3. **REV. NO./DATE OR TM CH. NO./DATE**	4. **SYSTEM/EQUIPMENT IDENTIFICATION**
S9086-QH-STM-010/ CH-470R3		Rev 3	

5. TITLE	6. **REPORT CONTROL NUMBER**
NSTM Chapter 470, Shipboard BW/CW Defense and Countermeasures	

7. **RECOMMENDED CHANGES TO PUBLICATION**

PAGE NO. A.	**PARAGRAPH B.**	**C. RECOMMENDED CHANGES AND REASONS**

8. ORIGINATOR’S NAME AND WORK CENTER (Please Print)	**9. DATE SIGNED**	**10. DSN/COMM NO.**	**11. TRANSMITTED TO**

12. SHIP HULL NO. AND/OR STATION ADDRESS (DO NOT ABBREVIATE)

FOLD HERE

DEPARTMENT OF THE NAVY

PLACE
POSTAGE
HERE

Official Business

COMMANDER
PORT HUENEME DIVISION CODE 5B00
NAVAL SURFACE WARFARE CENTER
4363 MISSILE WAY
PORT HUENEME, CA 93043–4307

FOLD HERE